Shenzhen SilverCNC Tech Co.,Ltd.

Address:No.133,Bldg.12, Zhong Hai Xi An Hua Fu,
Shajiang Road, Songgang Street, Bao An district,
Shenzhen
Tel: 86-180-98920890
Email: liuxuan52020@gmail.com
Website: www. silvercnc.com

CNC accessories expert

Shenzhen SilverCNC Tech Co.,Ltd.

Company profile

Shenzhen Silvercnc Tech Co.,Ltd founded in 2013,which focus on CNC industry,poviding the best quality accessories products at the best price for our customers. Silvercnc international trade officially started in 2019,providing products and services for the world.

Our products include CNC rotary table,touch probe,stylus,tool setter,zero point clamping system,quick changer chuck, self centering vise and other machinery accessories.

All the cnc machining accessories are used to improve processing efficiency, reduce setup time, reduce machine downtime,to help generate more revenue

Our Mission:

Our Mission:We hope to help customers solve problems, help our customers find the most appropriate products, and help our customers create value

Our Values:

Our Values:Honesty and win winWe believe that honesty is very important. Honesty can make us trust each other more. We also pay attention to win-win Only win-win can make our relationship more lasting

Features and advantages:

These accessories are post-processing products, which have been widely used in China. Due to good quality, competitive price and high added value, they have been recognized by customers

rotary table: roller cam driver structure,no backlash,no wear, high accuracy and good efficiency preload and high rigidity

Trigger probes: good repeatability 1um (2 σ), can replace Renishaw, Blum, MARPOSS band probe brands

tool setter: *for tool length detection and breakage detection. High precision, can replace Blum and metrol brands*

Zero point clamping system: *essential to save time during setup and for successfully improving machine running time*

Content

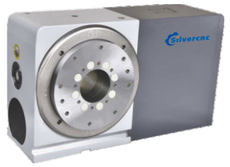

4TH axis rotary table

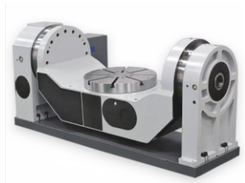

5TH axis rotary table

Horizontal rotary table

Infrared touch probe

Radio touch probe

probe stylus

Tool setter

touch trigger probe

laser tool setter

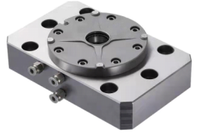

Zero point clamp

Quick change chuck

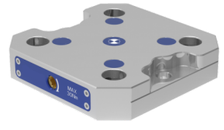

Mechanical zero point

Rollar CAM Driver CNC Rotary Table

Roller CAM Driver which uses the roller gear mechanism,The unit is constructed from an input shaft(the roller gearcam) and a turret(output shaft)fited with roller folowers. The roller followers are preloaded against a screw-like input shaft to completely eliminate backlash. Our proprietary adjustment mechanism provides optimum preload. The roller folowers planted in the turrt which use internal roler bearings to transfer torque while rotating.

- No backlash (play)during the clcokwise/anti-clockwise rotation
- No wear because power transfers through rolling contact
- High accuracy and good efficiency Preload and high rigidity

CAM

Needle roller bearing

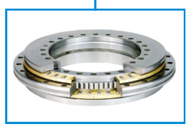

YRT bearing

4 Axis NC Rotary Table

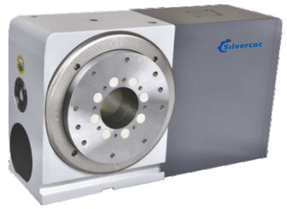

SILVER C 170 F 2

- 2 — Servo Motor Type
- F — Servo Motor Make
- 170 — Table Diameter
- C — TYPE:Single Spindle NC Rotary Table(Standard)
- SILVER — Brand

Servo Motor Maker: F: FANUC S: SIEMENS M: MITSUBISHI Y: YASKAWA SY: SANYO

Structure Analysis (Roller CAM Driver VS Worm Gear)

Item	Roller CAM Driver	Worm Gear Type
Appearance		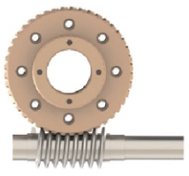
Contact	rolling contact	Slide contact
Material	hardening steel ,HRC60	Hardening steel ,HRC60
Hardness of the contact part	bearing steel ,HRC60	Phosphor broze,HB90
Preload	YES	NO
Transmission efficiency	Good	Worse
Backlash	Alway zero-backlash	Necessary for rub strock
Indexing accuracy	Under 20 arc-sec	12-20 arc-sec
High speed possiblity	Fast	Slow
Flipping time	0.5sec	1.5sec
Heating possibility	Low	High
Rigidity	High	Low
Durability	Good	Worse
Backlash adustment	Unnecessary	Necessary
Expansion of 5th Axis	Yes	No
Repair fees	Low (replace needle roller bearings)	High (Replace the worm gear)
Maintenance costs	Low (do not adust)	High (Adusted once a year)

Specification

Description		unit	SILVER-C120	SILVER-C170	SILVER-C180	SILVER-C200	SILVER-C250	SILVER-C255	SILVER-C320	SILVER-C400
Table Diameter		mm	Ø120	Ø170	Ø180	Ø200	Ø250	Ø250	Ø325	Ø400
Diameter of Table Central Hole		mm	Ø30H7	Ø40H7	Ø65H7	Ø75H7	Ø75H7	Ø75H7	Ø105H7	Ø150H7
Center Height (Vertical)		mm	110	135	150	160	160	210	210	255
Speed Reduction Ratio		/	32	40	50	50	50	50	50	50
Max. Rotation Rate of Table (Calculate with Fanuc α Motor)		rpm	90	75	60	60	60	60	60	60
Indexing Precision		sec.	±40	±20	±20	±20	±20	±20	±20	±15
Repeatability		sec.	±4	±4	±4	±4	±4	±4	±4	±4
Net Weight (servo motor excluded)		kg	30	40	65	88	93	105	225	335
Allowable Workpiece Load	Vertical	kg	25	60	70	90	90	130	165	230
	Horizontal	kg	/	/	145	180	180	260	330	460
Allowable Load	F	N	7149	8963	10422	12918	12918	27800	31572	44200
Strength of Roller Gear Cam		N.m	109	132	180	257	257	475	690	897
Max strength of Roller Gear Cam		N.m	150	185	235	471	471	900	1332	1720
Allowable bending torque		N.m	201	265	489	775	775	1450	3195	4150
Allowable Inertia Load Capacity		kg.m2	0.38	0.45	0.65	1	1	2.6	5.2	9.2
Clamping Torque		N.m	/	125	530	680	680	820	1985	3700
Clamping System (Pneumatic / Hydraulic)		Mpa	/	0.6 (Pneumatic)	5 (Hydraulic)	5 (Hydraulic)	5 (Hydraulic)	5 (Hydraulic)	5 (Hydraulic)	5 (Hydraulic)

Dimensions

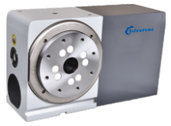

SILVER-C120

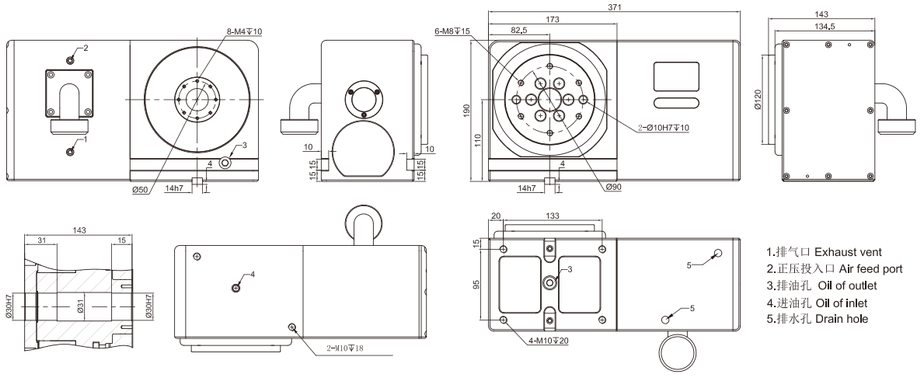

1.排气口 Exhaust vent
2.正压投入口 Air feed port
3.排油孔 Oil of outlet
4.进油孔 Oil of inlet
5.排水孔 Drain hole

SILVER-C170

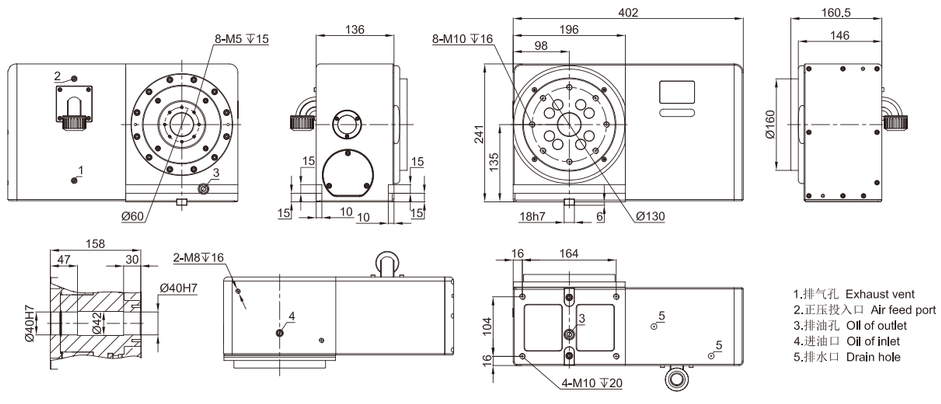

1.排气孔 Exhaust vent
2.正压投入口 Air feed port
3.排油孔 Oil of outlet
4.进油口 Oil of inlet
5.排水口 Drain hole

SILVER-C180

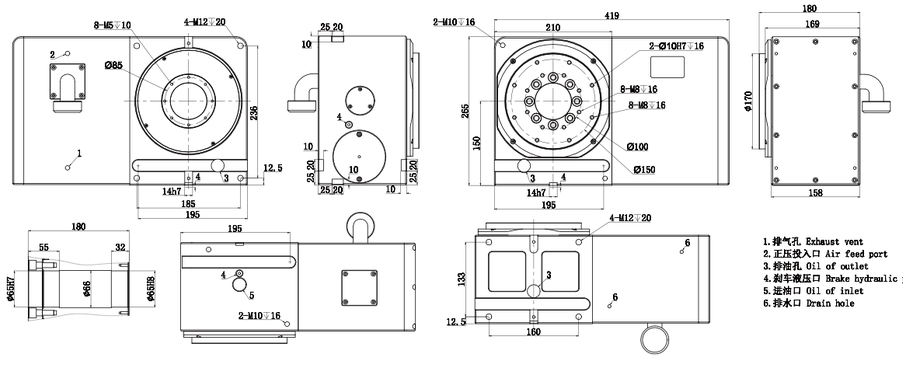

1.排气孔 Exhaust vent
2.正压投入口 Air feed port
3.排油孔 Oil of outlet
4.刹车液压口 Brake hydraulic port
5.进油口 Oil of inlet
6.排水口 Drain hole

Dimensions

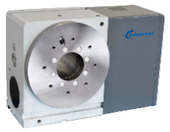

SILVER-C200

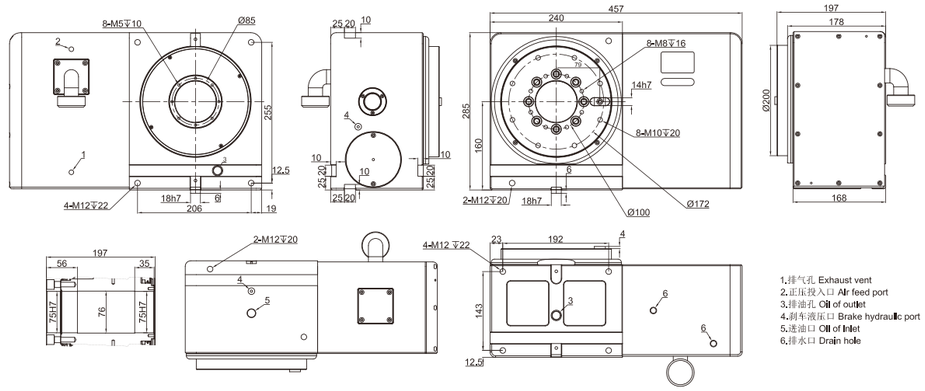

1.排气孔 Exhaust vent
2.正压投入口 Air feed port
3.排油孔 Oil of outlet
4.刹车液压口 Brake hydraulic port
5.进油口 Oil of Inlet
6.排水口 Drain hole

SILVER-C250

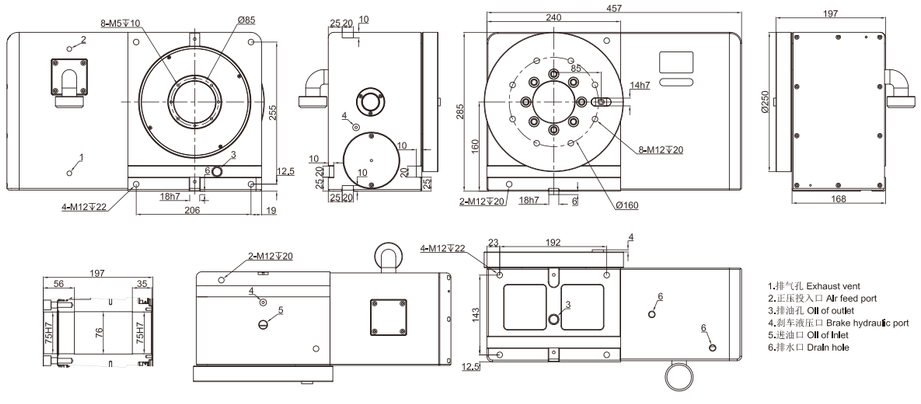

1.排气孔 Exhaust vent
2.正压投入口 Air feed port
3.排油孔 Oil of outlet
4.刹车液压口 Brake hydraulic port
5.进油口 Oil of Inlet
6.排水口 Drain hole

SILVER-C255

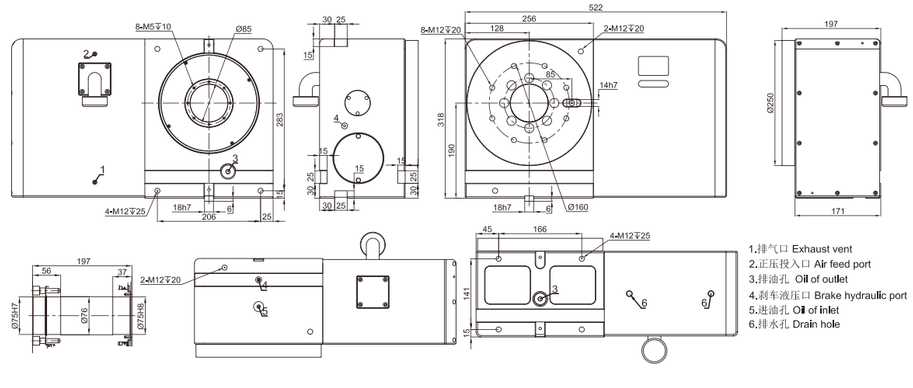

1.排气口 Exhaust vent
2.正压投入口 Air feed port
3.排油孔 Oil of outlet
4.刹车液压口 Brake hydraulic port
5.进油孔 Oil of inlet
6.排水孔 Drain hole

Dimensions

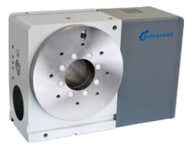

SILVER-C320

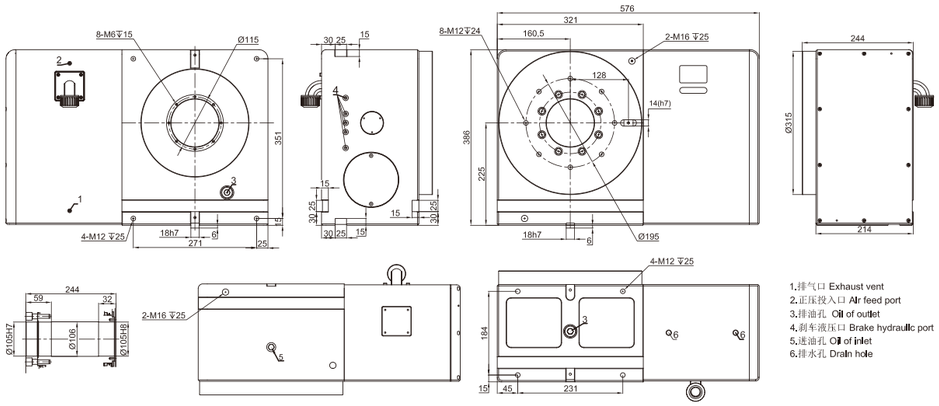

SILVER-C400

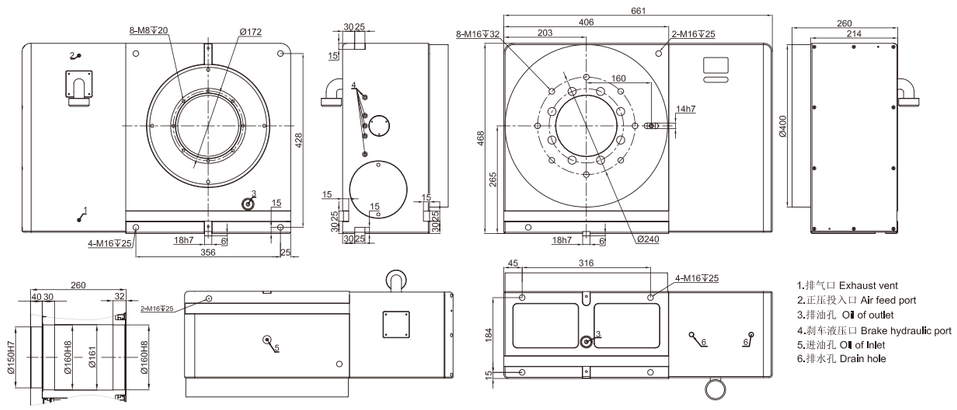

5 Axis NC Rotary Table

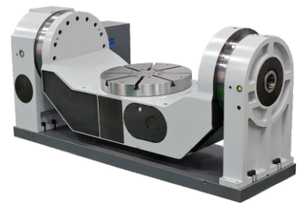

SILVER (R)T 100

- 100 — Table Diameter
- (R)T — TYPE: T– Single arm type; RT–Cradle type
- SILVER — Brand

Specification

Description		unit	SILVER-T100	SILVER-T200	SILVER-RT170	SILVER-RT200	SILVER-RT250	SILVER-RT300	SILVER-RT350	SILVER-RT400	SILVER-RTS650
Table Diameter		mm	100	200	170	200	200	300	350	400	650
Center Height (Vertical)		mm	202	292.5	155	260	294	280	330	400	468
Diameter of Table Central Hole		mm	Φ40H7	Φ60H7	Φ45H7	Φ40H7	Φ60H7	Φ65H7	Φ80H7	Φ80H7	Φ80H7
T-Slot		mm	/	12H7	12H7	12H7	12H7	12H7	12H7	14H7	18H7
Allowable Workpiece Load	Vertical	kg	20	35	35	70	70	150	150	150	250
	Horizontal	kg	30	50	50	100	100	200	200	200	350
Net Weight (servo motor excluded)		kg	120	260	150	200	420	560	560	1000	1700
Axis		/	Rotary axis / Tilt axis	Rotary axis / Tilt axis	Rotary axis / Tilt axis	Rotary axis / Tilt axis	Rotary axis / Tilt axis	Rotary axis / Tilt axis	Rotary axis / Tilt axis	Rotary axis / Tilt axis	Rotary axis / Tilt axis
Cooling System		/	Free Colling	Free Colling	Free Colling	Free Colling	Free Colling	Free Colling	Free Colling	Free Colling	Free Colling
Transmission Mechanism		/	Roller Cam	Roller Cam	Roller Cam	Roller Cam	Roller Cam	Roller Cam	Roller Cam	Roller Cam	Roller Cam
Angle range		/	360° / 20°~-120°	360° / 20°~-120°	360° / ±115°	360° / 30°~-120°	360° / 30°~-120°	360° / 30°~-120°	360° / 30°~-120°	360° / 20°~-120°	360° / ±120°
Min. increment		deg.	0.001 / 0.001	0.001 / 0.001	0.001 / 0.001	0.001 / 0.001	0.001 / 0.001	0.001 / 0.001	0.001 / 0.001	0.001 / 0.001	0.001 / 0.001
Speed Reduction Ratio		/	1/48 / 1/60	1/48 / 1/60	1/30 / 1/48	1/40 / 1/40	1/60 / 1/90	1/60 / 1/90	1/75 / 1/84	1/48 / 1/50	1/120 / 1/126
Rated / Max. Speed		rpm.	60 / 50	50 / 42	72 / 62.5	75 / 75	50 / 33	33.3 / 33.3	40 / 35	60 / 60	25 / 23
Indexing Precision		sec.	±30 / ±40	±25 / ±40	±20 / ±40	±20 / ±40	±20 / ±40	±20 / ±40	±20 / ±40	±20 / ±40	±20 / ±40
Repeatability		sec.	±4 / ±4	±4 / ±4	±4 / ±4	±4 / ±4	±4 / ±4	±4 / ±4	±4 / ±4	±4 / ±4	±4 / ±4
Clamping System(Hydraulic)		Mpa	/ /	5 / 5	0.6 / 0.6	3.5 / 3.5	5 / 5	5 / 5	5 / 5	5 / 5	5 / 5
Clamping Torque		N.m	/ /	147 / 490	/ /	150 / 410	588 / 980	600 / 1580	2156 / 2450	2156 / 2450	2860 / 6100
Servo Motor Model	FANUC	Taper / Straight	αis2 /βis2 / αiF4 /βis4	αis4 /βis4 / αiF8 /βis8	αiF8 /βis12 / αiF8 /βis12	αiF8 /βis12 / αiF8 /βis12	αiF8 /βis12 / αiF8 /βis12	αis8s /β12is / α12iF/β22is	αis8s /β12is / α12iF /β22is	αis8s /β12is / α12iF /β22is	α12iF /β22is / α22iF /β30is
	MITSUBISHI	Straight	KP43 / KP73	KP73 / HF104S	HF154S / HF154S	HF154S / HF154S	HF154S / HF154S	HF154S / HF303A	HF154S / HF204S	HF154S / HF204S	HF204S / HF354S
	BROTHER	Straight	R2AA 08075 / R2AA 08100	R2AA 08075 / R2AA 08100	1FK 7063 / 1FK 7063	1FK 7063 / 1FK 7063	1FK 7063 / 1FK 7063	1FK 7063 / 1FK 7083	1FK 7063 / 1FK 7083	1FK 7063 / 1FK 7083	1FK 7083 / 1FK 7101
	YASKAWA	Straight	SGMGV -04A / SGMGV -08A	SGMGV -08A / SGMGV -09A	SGMGV -20A / SGMGV -20A	SGMGV -20A / SGMGV -20A	SGMGV -20A / SGMGV -20A	SGMGV -20A / SGMGV -30A	SGMGV -20A / SGMGV -30A	SGMGV -20A / SGMGV -30A	SGMGV -30A / SGMGV -44A

Dimensions

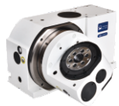

SILVER-T100

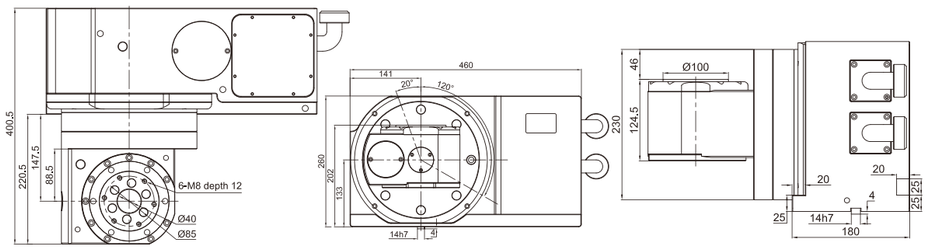

SILVER-T200

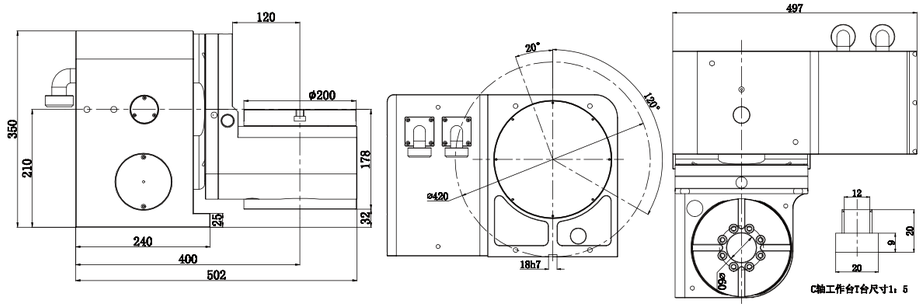

SILVER-RT250

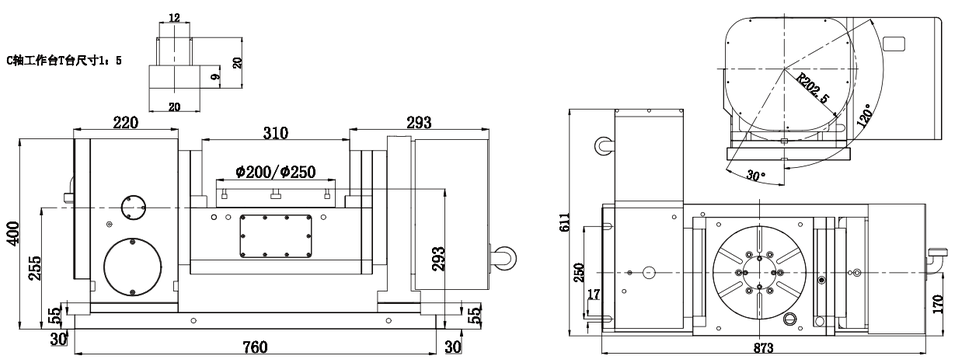

Dimensions

SILVER-RT350

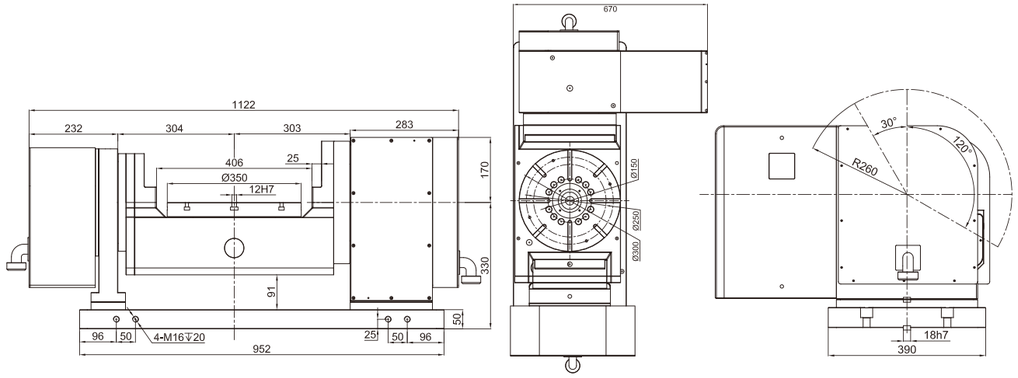

SILVER-RT650

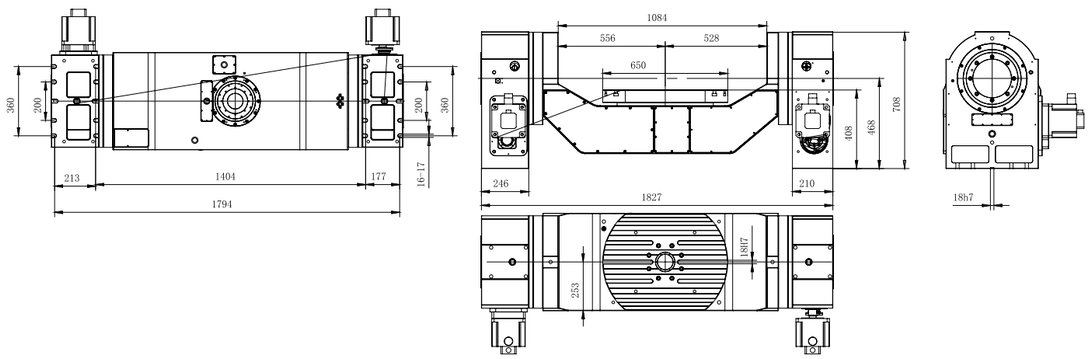

Dimensions

SILVER-T170

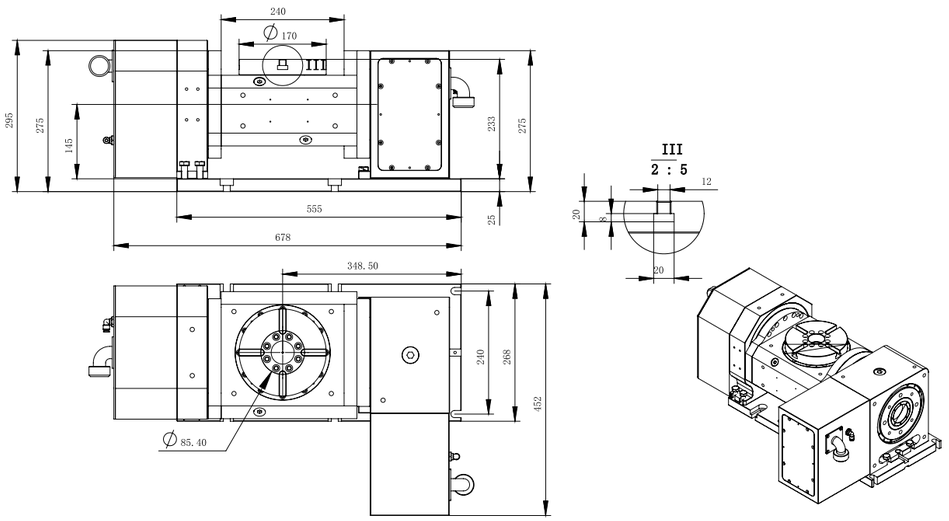

SILVER-RT200

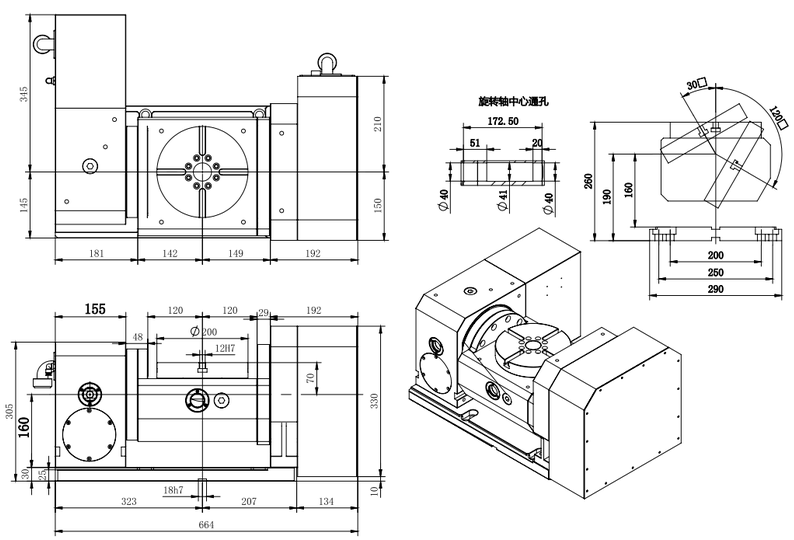

Dimensions

SILVER-RT300

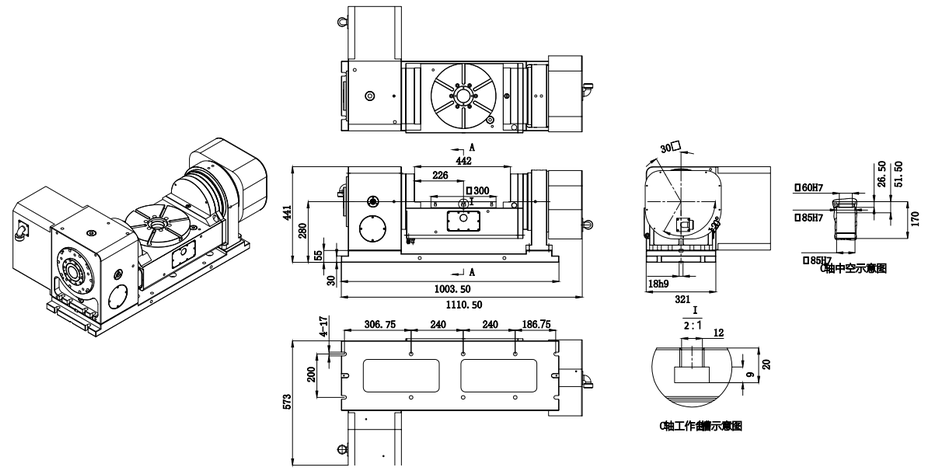

SILVER-RT400

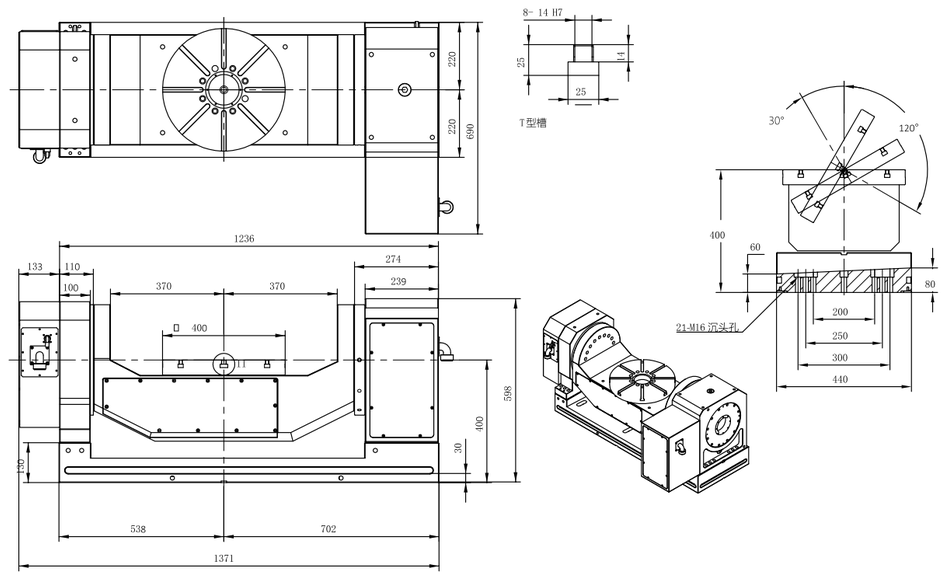

Horizontal NC Rotary Table

SILVER — H — 500 — F — 22

- 22: Servo Motor Type
- F: Servo Motor Maker
- 500: Table Diameter
- H: TYPE:Single Spindle horizonta NC Rotary Table
- SILVER: Brand

Servo Motor Maker: F:FANUC S:SIEMENS M:MITSUBISHI Y:YASKAWA SY:SANYO

Specification

Description	unit	SILVER-H500	SILVER-H630	SILVER-H800
Table Diameter	mm	500	630	800
Allowable Workpiece Load	kg	600	1200	2500
Min. Increment	deg	0.001°	0.001°	0.001°
T-Slot	mm	18H7	18H7	22H7
Indexing Precision	arc.sec.	± 15	± 15	± 15
Repeatability	arc.sec.	± 4	± 4	± 4
Speed Reduction Ratio	/	1/180	1/180	1/180
Rated / Max. Speed	rpm	11.1	11.1	11.1
Diameter of Table Central Hole	mm	Ø50H7	Ø50H7	Ø50H7
Net Weight (servo motor excluded)	kg	530	600	1210
Strength of Roller Gear Cam	N.m	2450	3700	6400
Clamping System(Hydraulic)	Mpa	5	5	5
Clamping Torque	N.m	2860	3900	8000

Dimensions

SILVER-*H500*

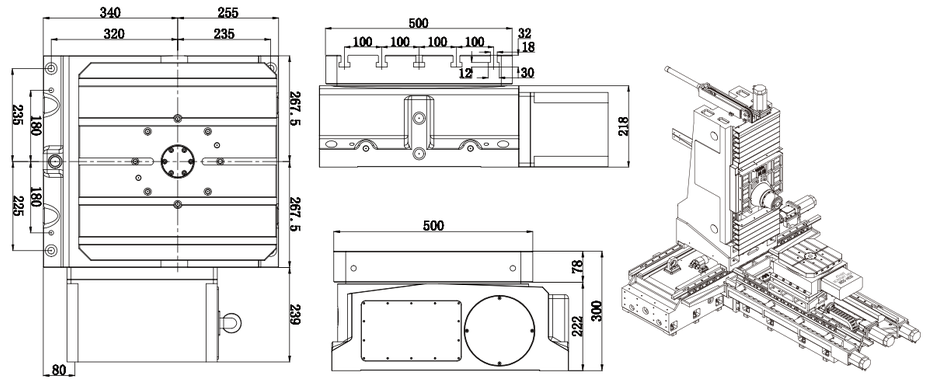

SILVER-*H630*

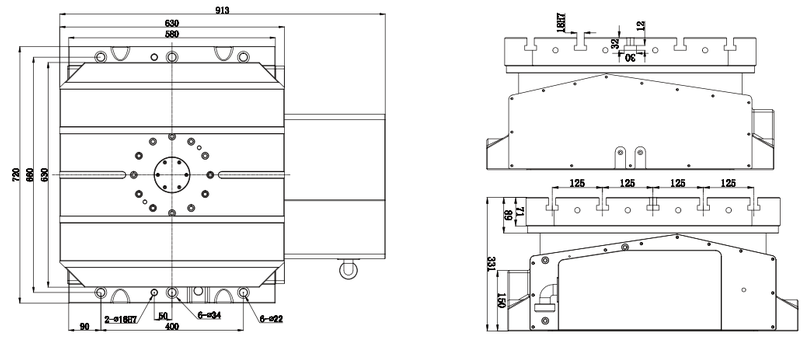

SILVER-*H800*

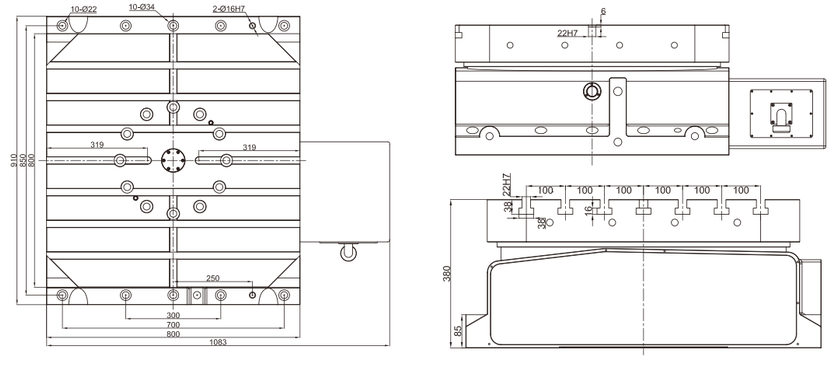

Tailstock

RS170

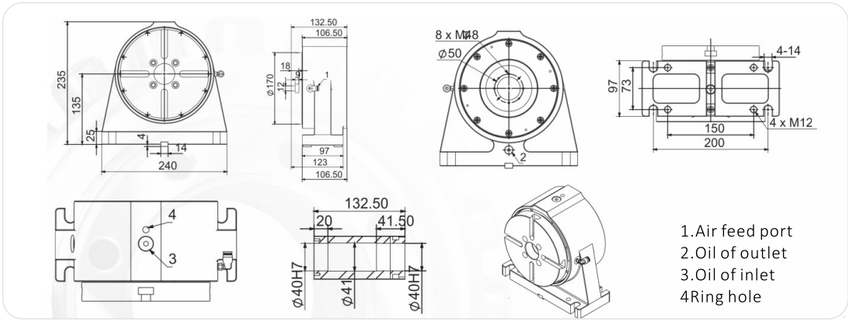

RS180

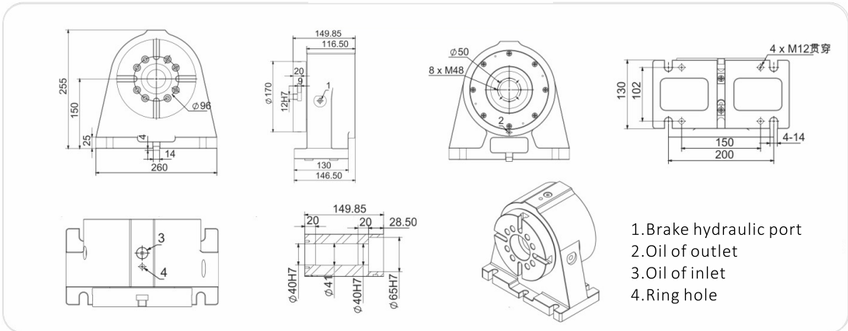

RS200(250)

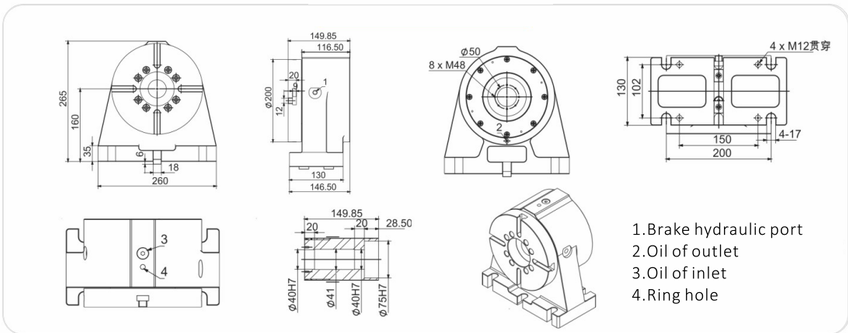

RS255(320)

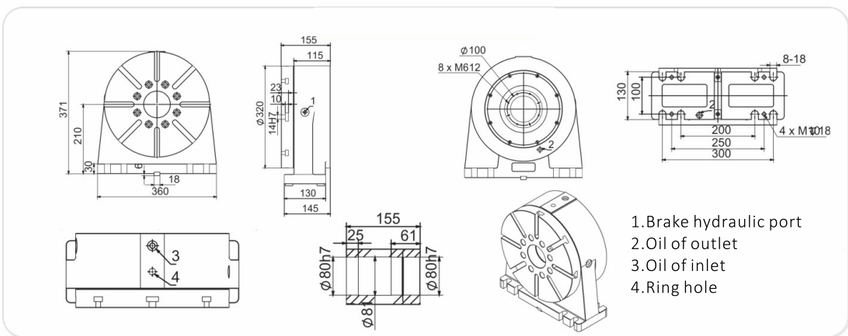

Attachment

Air-Oil Booster Unit (Optional)

※ Applicable for rotary table brake function
※ Fast, energy saving and low space demanding

Hydraulic Station (Optional)

▯ Applicable for case that hydraulic clampare also used
▯ Hydraulic station is stable, and low temperature rise

Angle Encoder (Optional)

▯ Small size for limited space usage
▯ Through hole for placement of cables
▯ Easy installation, high accuracy

Angle encoder model	Circular grating accuracy	Precision of indexing disc
RCN-223F	±5”	10” 内
RCN-226		
RCN-228	±2.5”	8” 内
RCN-227F		
ROD-880	1”	5” 内
RON-270	±5”	10” 内
RON-275		
RON-280		
RON-285		
RON-287C	±2.5”	8” 内
RON-886	±1”	5” 内
RON-786-18000	±2”	6” 内
RON-786-36000		

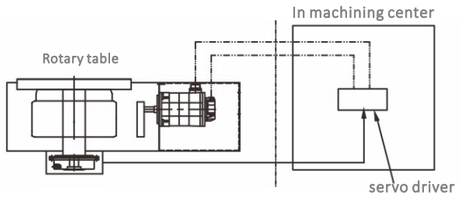

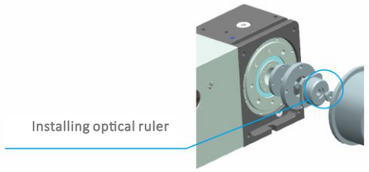

Suggestions on selection of roraryt able and bridge

Model	unit	A	B	C	D	E	F	G	H	I	J
SILVER-C160	mm	500	160	30	30	50	35	Φ160	H、J、K according to tailstock size and working space conditionsThe parameters are only used as suggestions for selection standard bridge		
SILVER-C170	mm	600	170	30	30	50	35	Φ170			
SILVER-C200	mm	650	200	30	30	60	35	Φ200			
SILVER-C250L	mm	650	250	30	30	60	35	Φ250			
SILVER-C250H	mm	700	250	35	35	60	35	Φ250			
SILVER-C315	mm	800	315	30	30	70	40	Φ315			
SILVER-C400	mm	900	400	40	40	70	40	Φ400			

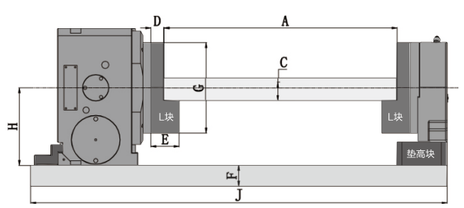

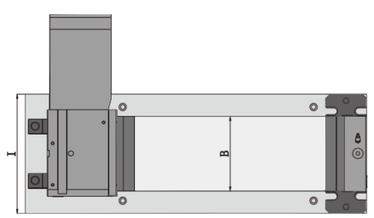

Manual chuck | Hydraulic chuck | Pneumatic chuck

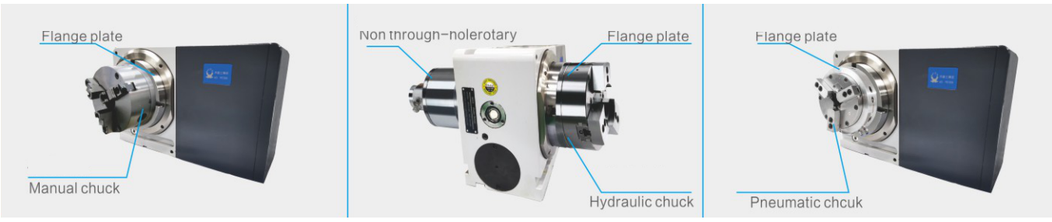

Rotary table and compatible chuck

Rotary table model	C120	C170	C200	C250	C250H	C315	C400
Chuck specifications	SC-4, SC-5	SK-6, SK-7	SK-7, SK-8	SK-8, SK-9	SK-8, SK-9	SK-10, SK-12	SK-10, SK-12

Chuck clamping range

Size/model	SC-4	SC-5	SC-6	SC-7	SC-8	SC-9	SC-10	SC-12	SC-16
Outer diameter clamping range	ϕ3-ϕ90	ϕ3-ϕ110	ϕ3-ϕ160	ϕ8-ϕ180	ϕ8-ϕ190	ϕ11-ϕ220	ϕ12-ϕ260	ϕ15-ϕ300	ϕ30-ϕ400
Clamping range of inner diameter	ϕ32-ϕ84	ϕ35-ϕ100	ϕ55-ϕ150	ϕ62-ϕ170	ϕ68-ϕ180	ϕ70-ϕ210	ϕ80-ϕ250	ϕ90-ϕ290	ϕ110-ϕ380

Accessories connection diagram

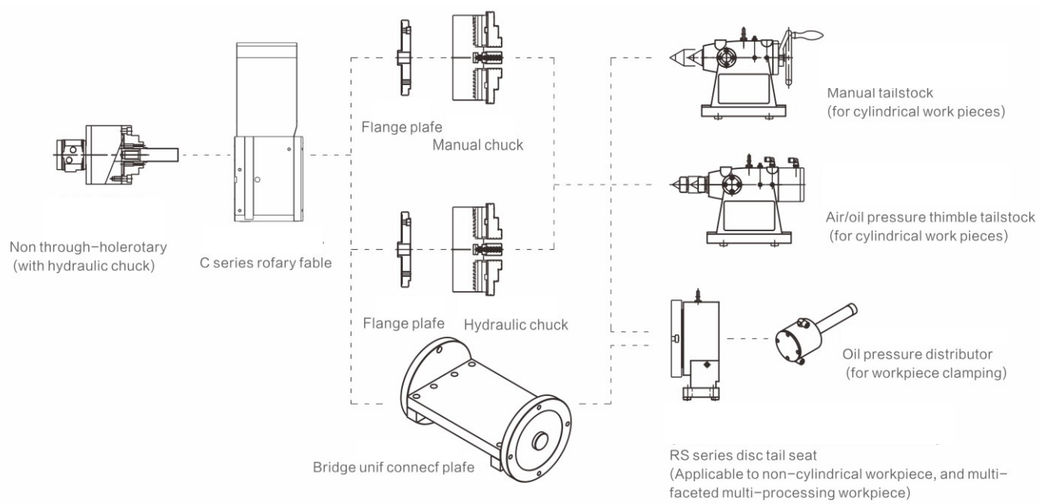

Wiring Diagram

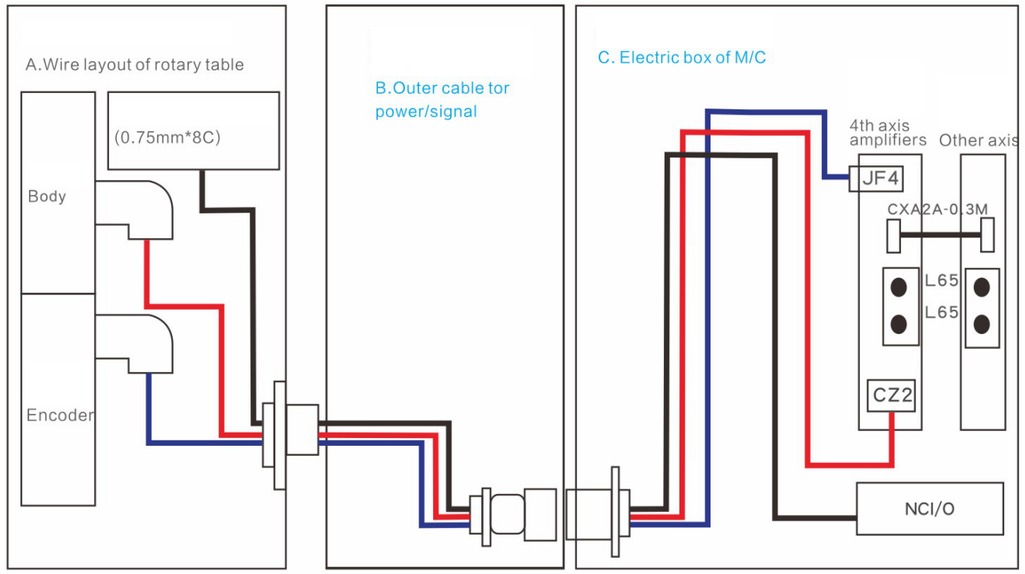

Schematic diagram of rotary table and CNC machine

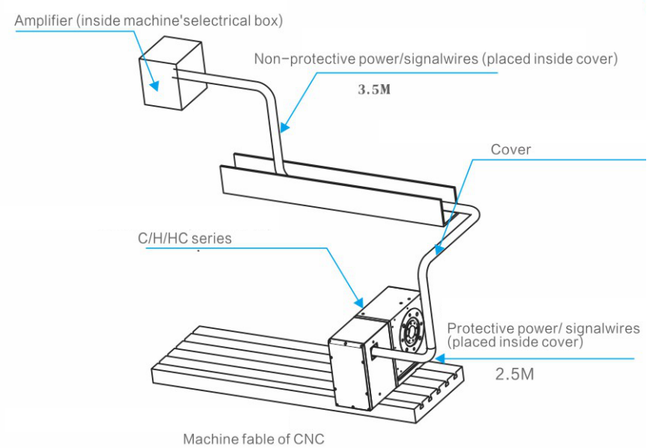

Characteristics

※ Allows for simultaneous control with X, Y,Z-axis ofmachine and ARC machining.
※ Programs can be directly edited on the controlscreen of the machine.
※ Suggested length 2.5M with protective pipe forouter power / signal cable, from motor coverto machine guarding. (for x travel 500-1300mmmachines)
ggested length 3.5M without protective pipefor power / signal cable, from machine guardingto amplifier.

Machine tool touch probe

Benefits of using a machine tool inspection probe

Set a workpiece prior to machining

1.Reduced machine downtime
2.Automatic fixture, job alignment and rotary axis set-up
3.Manual setting errors eliminated

Inspect feature dimensions on-machine

1.In-cycle part measurement with automatic offset correction
2.Increased confidence in unmanned machining
3.Adaptive machining, providing process feedback to minimise variation
4.First-off inspection with automatic offset update
5.Reduced machine downtime awaiting first-off inspection results

Principle of silvercnc probe

Principle of the probe is the same as renishaw brand, Three equally spaced rods rest on six tungsten carbide balls to provide six points of contact.

Under load of the spring, contact patches are created between the balls and the rods through which the electrical current flows. Upon making contact with (touching) a workpiece, the force translated through the stylus moves the balls and rods apart thus reducing the size of the contact patches and increasing their electrical resistance.

When a defined threshold is reached the probe is triggered.

Repeatable electrical triggering and mechanical reseating of the mechanism are critical to this process and fundamental to reliable metrology.

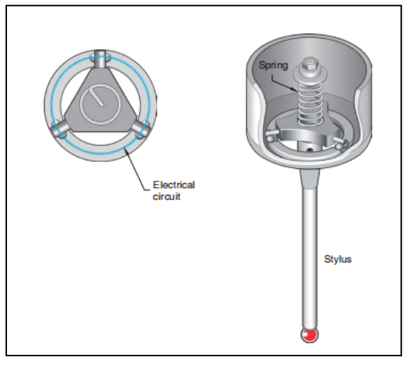

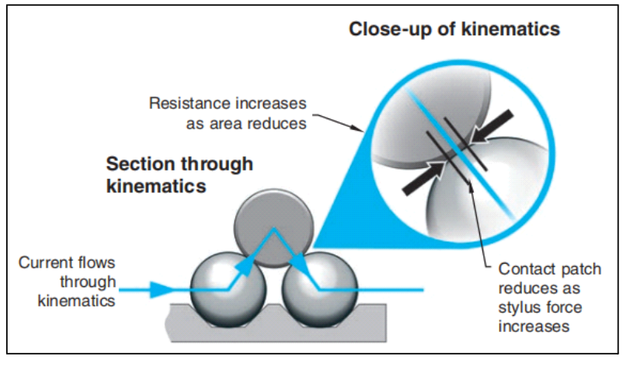

hardware and marco program

hardware:

A standard touch probe contains the following accessories, which can be used after installation and debugging without the need to purchase additional accessories, list:

Name	Quantity	Specification
probe	1 piece	standard
reciver	1 piece	standard
styli	1 piece	stankared is ϕ2*50 flat stylus
battery	2 piece	SaFT 14250
tool holder	1 piece	BT30 and Bt40
pull stud	1 piece	match with tool holder
Magnetic base	1 piece	standard
spanner	1 piece	standard

marco program

our programs are basically universal with renishaw ,to measure 2D dimensions, no additional software is required, only marco needed

Macro program templates can be provided. If have experience in using Renishaw , blum and marposs probes, you can also use their programs directly. Because the , just need to change a few parameters.

Many kinds of CNC controler system can installed successfully include: Mitsubishi, FANUC, brothers, Siemens, heidenhain, FAG, Haas, Mazak, Makino, DMG, Doosan and so on

advantages

Perfect mechanical structure design

Silvercnc touch probe use a proven technology -kinematic resistive principle that can stably operate for long time

Reliable signal transmission

Silvercnc use coded signals optimized optical communication technology, to sure that the signal transmission is stable, response speed fast, and don't lose signals.

Long battery life

The probe adopts the multi-threshold power consumption control technology, which greatly reduces the product power consumption, and by optimizing the chip design and circuit design, improves the battery life further.

Optical probe

advantages

- Optical 2-channel, ermote channel switching, industry first
- Low power consumption with battery life over 1 year , leading the industry <1/100000 lost signal probability
- IP68 protection level

Parameter

Model	SOMP40		SRMP40	
Unidirectional repeatabilityUse standard 50mm probe at 600mm/min speed	1um (2 σ)		1um (2 σ)	
Sense directions	± X, ± Y,+Z		± X, ± Y,+Z	
Stylus trigger forceUse standard 50mm probe	XY plane0.4 – 0.8N	Z direction4.0N	XY plane0.4 – 0.8N	Z direction4.0N
Trigger protection trip	XY plane+/–15°	Z direction6.35mm	XY plane+/–15°	Z direction6.35mm
Signal transmission method	Optical transmission		radio transmission	
Operating range	5m		15m	
Trigger life	>10 Million times		>10 Million times	
Transmission angle	360 ° along the probe axis		360 ° along the probe axis	
Transmission on/off style	smart switch		smart switch	
Weight without shank (including batteries)	280g		280g	
type of battery	2x lithium battery 14250		2x lithium battery 14250	
battery life	Standby	>600 days	Standby	>600 days
	5% use	>540 days	5% use	>540 days
	continue use	>360 days	continue use	>360 days
Sealing	Ip68		Ip68	
Operating temperature	0–60℃		0–60℃	

Dimensions

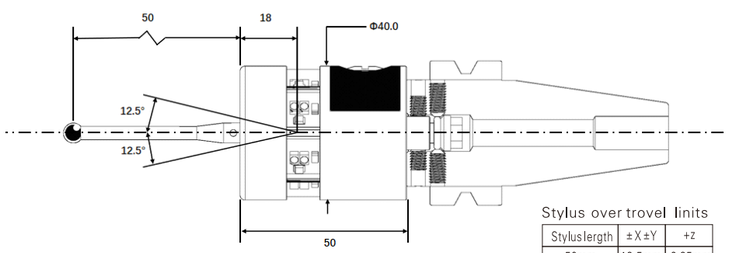

Stylus over trovel linits

Styluslergth	±X±Y	+z
50mm	13.5mm	6.35mm
100mm	24.0mm	6.35mm

Wired probe

Parameter

Model	SLP25	
Unidirectional repeatabilityUse standard 50mm probe at 600mm/min speed	1um (2σ)	
Sense directions	±X,±Y,+Z	
Stylus trigger forceUse standard 50mm probe	XY plane0.4- 0.8N	Z direction4.0N
Trigger protection trip	XY plane+/-15°	Z direction6.35mm
Signal transmission method	Hard wired	
Trigger life	>10 Million	
Transmission on/off style	smart switch	
Weight without shank (including batteries)	80g	
Hard wire	5m, oil resistance, 4 core	
Sealing	IP68	
Operating temperature	0-60℃	

Dimensions

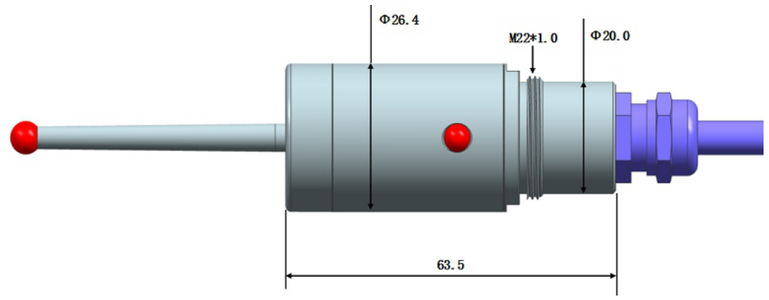

Silvercnc

High Cost Performance Stylus

L1: Total length
L2: Effective length
D1: pointed end Diam

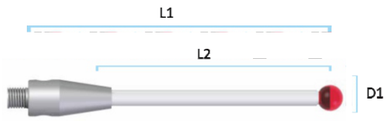

pointed end material	Tungsten steel	Tungsten steel	Ruby	Tungsten steel	Ruby	Ceramic	Ruby	Ruby	Ruby	Ruby	Ruby	Ruby	Ruby	Ruby	Ceramic	Ruby	Ceramic
pointed end Diam D1/mm	0.5	1.0	1.0	2.0	2.0	7.4	2.0	3.0	3.0	4.0	5.0	5.0	6.0	6.0	7.4	6.0	7.4
styli material	Tungsten steel	Tungsten steel	Tungsten steel	Tungsten steel	Ceramic	Ceramic	Tungsten steel	Ceramic	Tungsten steel	Ceramic	Tungsten steel	Ceramic	Tungsten steel	Ceramic	Ceramic	Ceramic	Ceramic
Total leng th L1/mm	10.0	20.0	20.0	20.0	30.0	50.0	50.0	50.0	50.0	50.0	50.0	50.0	50.0	50.0	50.0	100.0	100.0
Effective lengthL2/ mm	5.0	10.0	10.0	10.0	10.0	30.0	40.0	40.0	40.0	40.0	35.0	35.0	35.0	35.0	50.0	85.0	100.0

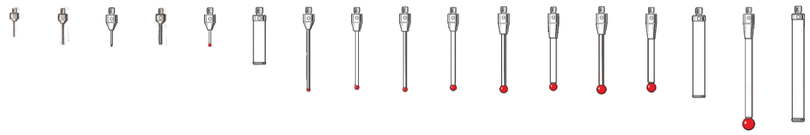

pointed end material	Ruby	Ruby	Ruby	Ruby	Ruby	Ruby	Ruby	Ruby	carbon fibre	carbon fibre	carbon fibre	carbon fibre	carbon fibre	carbon fibre	carbon fibre	carbon fibre
pointed end Diam D1/mm	4.0	5.0	6.0	4.0	6.0	6.0	6.0	6.0	3.0	3.0	3.0	6.0	3.0	6.0	6.0	6.0
styli material	carbon fibre	carbon fibre	carbon fibre	carbon fibre	carbon fibre	carbon fibre	carbon fibre	carbon fibre	carbon fibre	carbon fibre	carbon fibre	carbon fibre	carbon fibre	carbon fibre	carbon fibre	carbon fibre
Total leng th L1/mm	30.0	30.0	30.0	50.0	50.0	100.0	150.0	200.0	40.0	50.0	70.0	80.0	90.0	100.0	150.0	200.0
Effective lengthL2/ mm	25.0	25.0	25.0	40.0	40.0	85.0	135.0	185.0	40.0	50.0	70.0	80.0	90.0	100.0	150.0	200.0

Spindle stylus | 18mm Star shaped | 30mm Star shaped | Disk type stylus | Hollow balls tylus | Micro ruby | Tungsten carbide | Curved stylus

Machine tool tool setter

Tool setting solutions for machining centres

Reduce scrap and increase productivity by accurately setting the length and diameter of cutting tools on CNC machining centres prior to machining. Silvercnc has designed a range of tool setters, offering both contact and non-contact tool measurement and broken tool detection.

Benefits of automated tool setting

Using slip gauges and entering offset data manually takes time and is prone to operator error. Tool setting probes are easily installed on machining centres and CNC turning centres, allowing automated operation with the following benefits:

1.Significant time savings with reduced machine downtime

2.Accurate tool length and diameter measurement

3.Automatic tool offset calculation and correction

4.Elimination of manual setting errors

5.In-cycle tool breakage detection

6.Reduced scrap

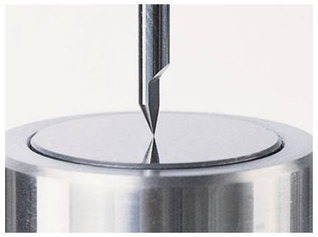

Silvercnc Tool Setter Models

Contact tool setters	Machine model	Signal transmission	tool setting	Minimum tool detection	Repeatability (2σ)
M-P11/P21-10	Small CNC Machining Centers	Hard-wired	only tool length	Ø1.0 mm	1.0 μm
M26D-20	Small – large	Hard-wired	only tool length	Ø1.0 mm	1.0 μm
M-T24E-20/40/60	large	Hard-wired	only tool length	Ø1.0 mm	1.0 μm
S5TS-L	Small – large	Hard-wired	tool length and diameter	Ø1.0 mm	1.0 μm
S5TS-R	Small – large	Radio	tool length and diameter	Ø1.0 mm	1.0 μm
STS20	Small – large	Hard-wired	only tool length	Ø1.0 mm	1.0 μm

Non-contact tool setter	Machine model	Signal transmission	tool setting	Minimum tool detection	Repeatability (2σ)
SNC86	Small – large	Hard-wired	tool length and diameter	Ø0.03 mm	±1.0 μm

Length measurement tool setter

1.It is used to measure the tool length, wear and break of CNC machine tools
2.Alarm will be given in case of over travel to prevent accidents
3.Shorten the measuring time of tools and improve the running time of machine tools
4.Save manpower and prevent unqualified products

Parameter

Product name	M-P11-10	M-P21-10	M26D-20	M-T24E-20/40/60
Contact diameter	Ø5mm	Ø10mm	Ø20mm	Ø20/40/60mm
Surface finishing	Grinding 4s	Grinding 4s	Grinding 4s	Grinding 4s
Contact material	Tungsten carbide	Tungsten carbide	Tungsten carbide	Tungsten carbide
Contact structure	NC (Normally closed)	NC (Normally closed)	NC (Normally closed)	NO(Normally open)
Pretravel	0	0	0	0.5mm
Stroke	3mm	5mm	5mm	12mm
Repeatability	0.001 (Recommended operating speed of 50 - 200mm/min)	0.001(Recommended operating speed of 50- 200mm/min)	0.001(Recommended operating speed of 50-200mm/min)	0.001(Recommended operating speed of 50-200mm/min)
Contact life time	3 million	3 million	3 million	3 million
Protective structure	IP67	IP67	IP67	IP67
Contact force	1.5N (Installation position: Vertical)	1.5N (Installation position: Vertical)	1.5N (Installation position: Vertical)	2.5N (Installation position: Vertical)
Cable	Oil resistant, standard 3 m (length can be customized)ϕ5/ 2cores	Oil resistant, standard 3 m (length can be customized)4cores	Oil resistant, standard 5 m (length can be customized)ϕ4.8 / 6 cores	Oil resistant, standard 5 m (length can be customized)ϕ4.8 / 6 cores
LED lamp	NONE	NONE	Default : LED OFF / Operating : LED ON	Default : LED OFF / Operating : LED ON
Over travel signal (built-in microswitch)				
Output mode	NONE	NC normally closed (an emergency stop when the signal broken)	NC normally closed (an emergency stop when the signal broken)	NC normally closed (an emergency stop when the signal broken)
Contact rating	NONE	DC24V 20 mA resistive load	DC24V 20 mA resistive load	DC24V 20 mA resistive load

Dimensions

M-P21-10

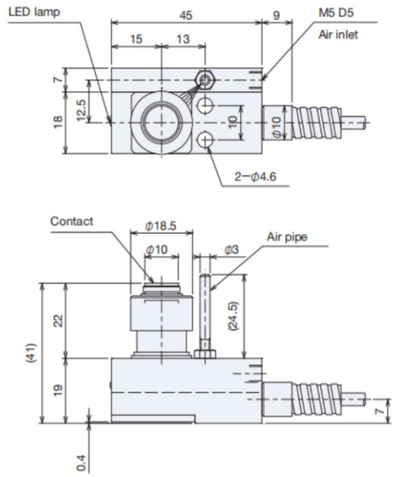

M26D-20

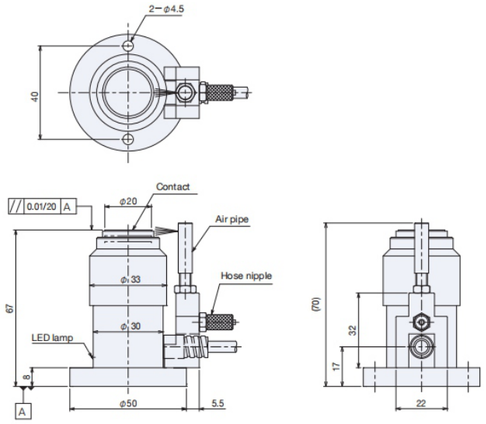

M-T24E-20

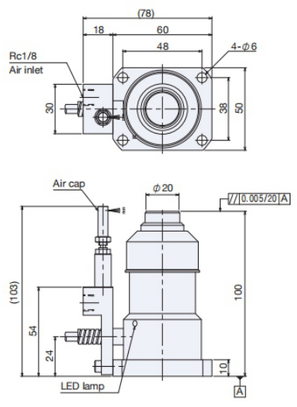

M-T24E-40

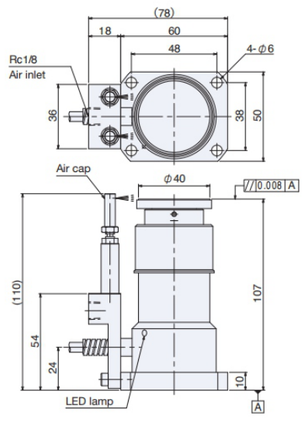

M-T24E-60

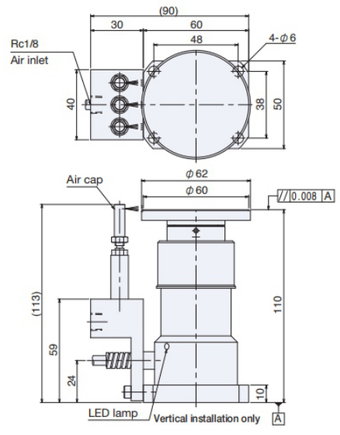

Touch trigger tool setter

mechanical structure of the 3D touch trigger tool setter

The tool setter use a proven technology-kinematic resistive principle(the same as renishaw) that can stably operate for long time.
Proven over four decades, this design has been the main choice for the majority of machine builders and end users to ensure accuracy and reliability.
The ability of the probe mechanism to reseat after triggering to within 1.00 µm is fundamental for repeatability and good metrology.
From simple length and radius checking to broken tool detection, this technology is available in silvercnc touch probe and contact tool setters.

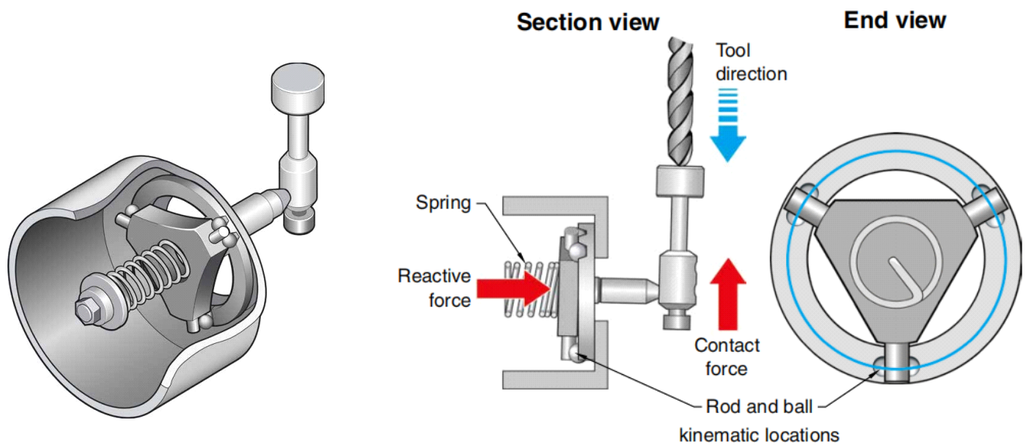

Tool setter benefit:

- In addition to measuring tool length, breakage and broken tool detection, it can also detect tool diameter
- Alarm signal will occur in the course of travel and damage accident will be prevented.
- 1µm (0.001) repeatability precision improves the processing precision.
- Shorten the measuring time, improve the efficiency of the operation of the machine tool
- Automatic operation, save labor, prevent the emergence of substandard products
- Applicable to the Engraving machine and all kinds of control machinery in Japan, Taiwan, South Korea, China, Germany. Such as fanuc, SYNTEC, Baoyuan, Siemens, FAGOR, Mitsubishi, etc.

DMTS Tool Setter Feature:

- Double function measurement of tool length and tool diameter
- Repeat positioning accuracy <1um
- Super IP68 level protection, double protection structure
- 10 million contact life
- It is suitable for all kinds of CNC machine tools with mounting tables that do not need rotatio

specification:

model	S5TS-L	S5TS-R
output	NO(Normally open)	NO(Normally open)
Sense directions	±X,±Y,+Z	±X,±Y,+Z
Pretravel	0	0
travel	XY +/-15°, Z-6.35mm	XY +/-15°, Z-6.35mm
Repeatability	<1um	<1um
Trigger life	>10million	>10million
Protect structure	Ip68	Ip68
contact force	XY0.4N~0.8N,Z-4.0N	XY0.4N~0.8N,Z-4.0N
Signal transmission method	Cable	Radio
Contact material	Tungsten carbide	Tungsten carbide
Surface finishing	Grinding 4s	Grinding 4s
Rated voltage and current	DC24V 20mA	DC24V 20mA
Cable	Oilresistant,standard3m(length can becustomized) Minimum radius R7	Oilresistant,standard3m(length can becustomized) Minimum radius R7
LED lamp	Default: LED OFF/Operating: LED ON	Default: LED OFF/Operating: LED ON

Wiring diagram of tool setting

A output mode of high level signal:

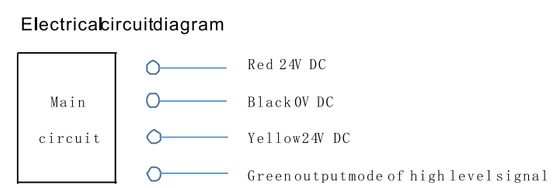

B.output mode of low level signal:

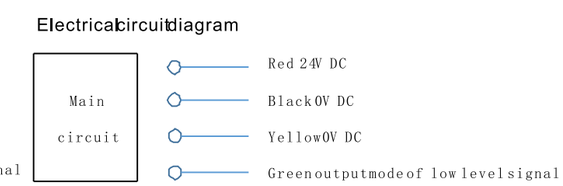

Dimensions

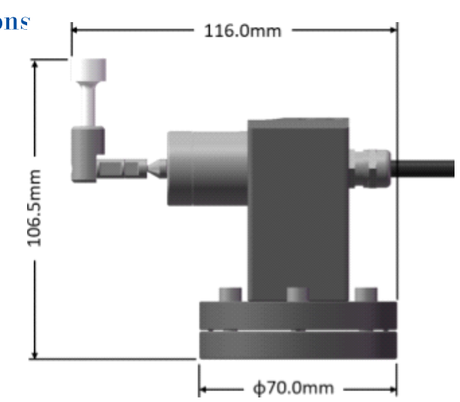

Optoelectronic signal trigger tool setter

The DTS series tool setter composed by a photoelectric switch,a contact with high hardness and wear resistance, a signal transmission interface. photoelectric switch is key parts, When the sensor beam is interrupted, a trigger signal will be sent out and transmitted to the NC system through the interface device to identify, calculate, compensate and access the tool length

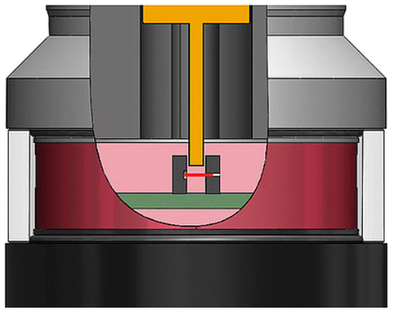

Advantage of optoelectronic tool setter

1. Enables much higher measuring speeds than with conventional tool setter
2.High precision(<0.5um（2σ）) and stable signal
3. Wear-free with long-term stability

Circuit diagram

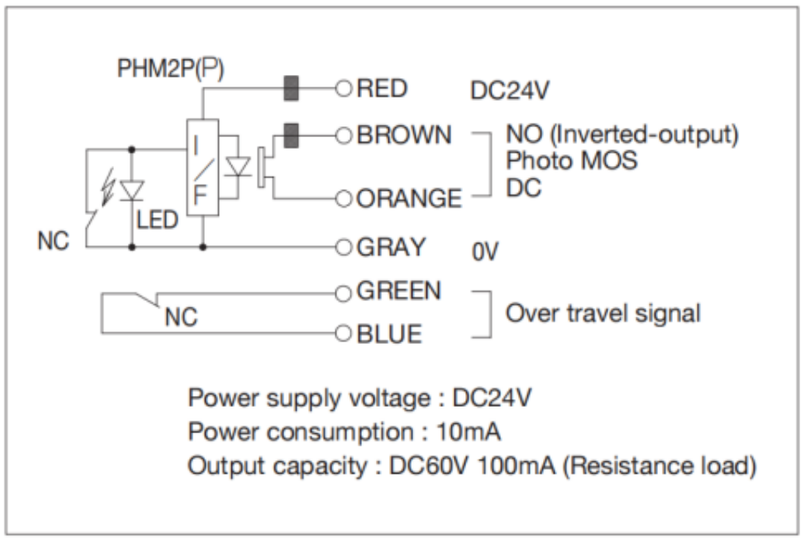

Model and specifications

Product name	SPTS20	SPTS10
Contact diameter	20	10
Direction	Z	Z
Pretravel	No	No
Signal	Normally open	Normally open
Stroke	11	5.4
Protective stroke	5.5	No
Repeatability	0.5um	0.5um
Contact life time	20 million times	20 million times
Signal transmission	cable	cable
sealing	Ip68	Ip68
Contact force	1.5N (Installation position: Vertical)	1.3N (Installation position: Vertical)
Surface finishing	Grinding 4s	Grinding 4s
Contact material	Tungsten carbide	Tungsten carbide
Contact rating	DC24V 20 mA resistive load	DC24V 20 mA resistive load
Cable	2m	1.5m
LED lamp	Default : LED OFF / Operating : LED ON	Default : LED OFF / Operating : LED ON

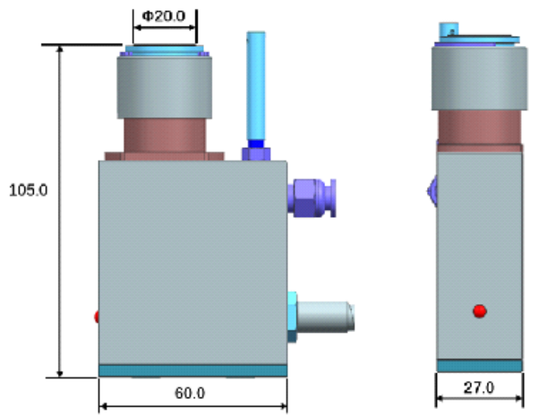

SGTS20

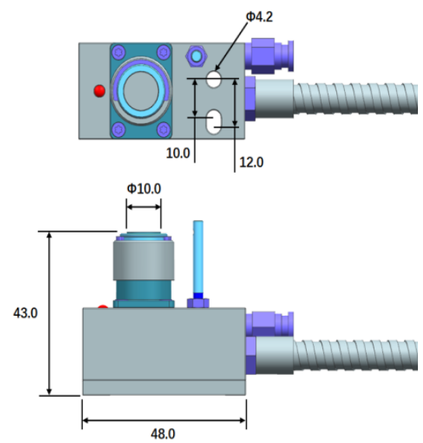

SGTS10

Laser control tool setter

Description

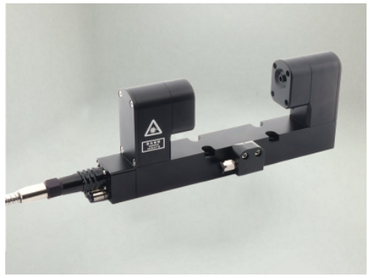

1.The passage of a tool into the beam causes a reduction in laser light seen at the receiver, fromwhich a trigger signal is generated.This latches the machine position at that instant, providing theinformation to determine a tool's dimension. With approaches from several directions, toolgeometry can also be accurately determined. These systems can also be used to detect brokentools, by rapidly moving the tool into a position where it should intersect the laser beam, if lightreaches the receiver, the tool tip must be missing.

2.The non-contact laser beam can check very small tools quickly, reliably and without collisionrisk. Even the latest high hardness brittle cutting materials can be measured with this laser toolsetting instrument system.

3. Because the tool is measured at the rated speed, the errors of tool, spindle and tool holder areall detected and can be corrected directly.

Laser Measuring Function

1. Tool length measurement
2. Measure the tool radius and detect the tool breakage
3. Quick tool breaking detection alarm
4. Single edge inspection and shape inspection
5. Anti drip function
6. Machine tool temperature compensation function

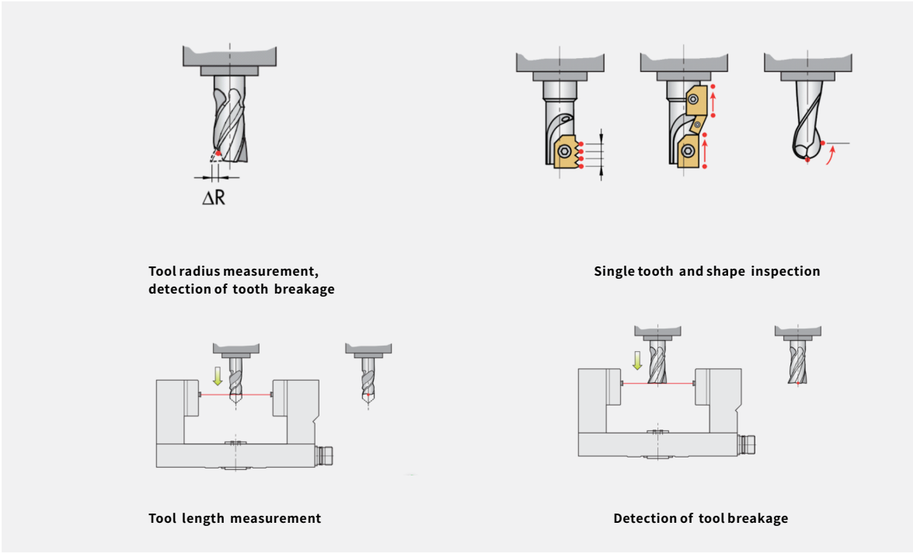

parameters

Principal application	High-precision, high-speed non-contact tool setting and tool breakage detection on all sizes of vertical and horizontal machining centres,multi-tasking machines and gantry machining centres
Laser beam alignment	The unit is supplied with an adjustable mounting plate on the underside
Cable(to interface)	Hard-wired systems: cable on the end of the unit.
Sealing	IPX8
typical repeatability	±0.1 μm 2σ
Repeatability	±1 μm 2σ
minimum tool or feature size	Ø0.1 mm orlarger
max tool or feature size	86 mm
minimum tool for breakage detection	Ø0.1 mm orlarger
power	100 mA @ 24 V
output signal	No voltage solid state relay (SSR). Each relay may be normally open. Current (Max.) 50 mA, voltage (Max.) ±50 V
Storage temperature	-10 °C-50 °C
Operating temperature	5 °C-50 °C
Life	Tested to > 1 million on/off cycles
pneumatic supply	4 mm Air pipe, 6.0 bar (87.02 psi) maximum 3 bar(43psi) min.
Cable	Ø6.0*8m (0.24 in) , two twisted pairs, two individual cores plus screen, each core 18 × 0.1 mm insulated
Mounting	M10 (3/8 in)

Dimessions

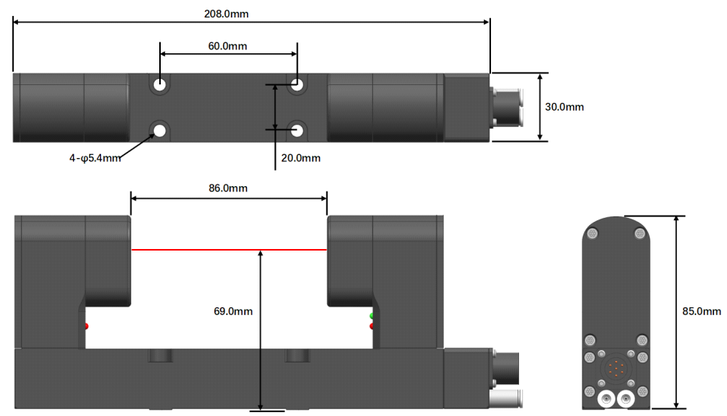

Touch probe and tool setter application

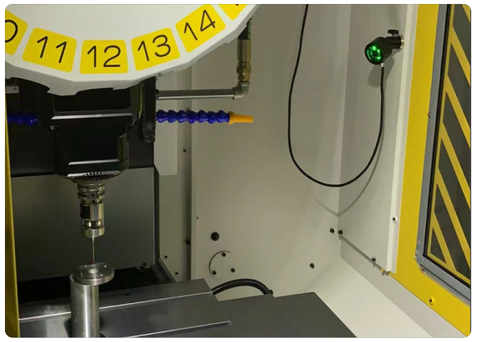
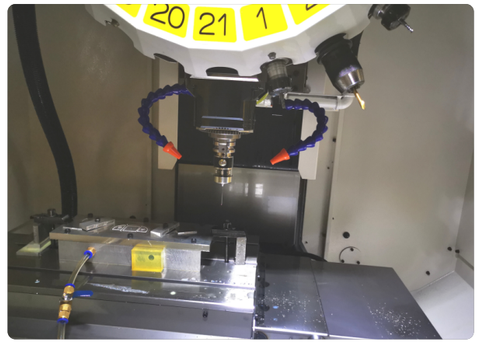
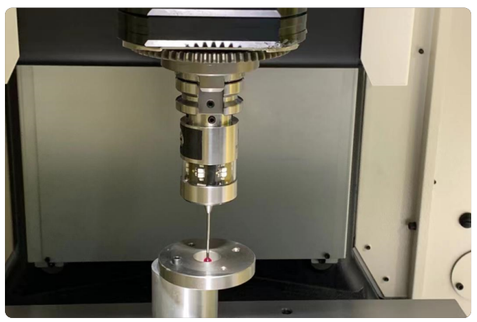
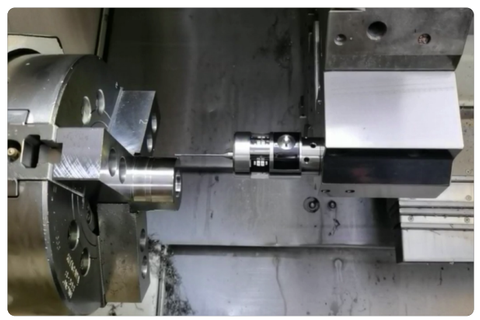
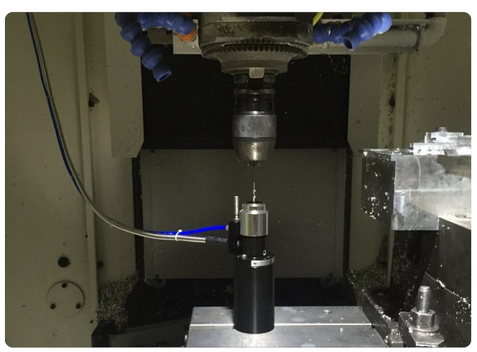
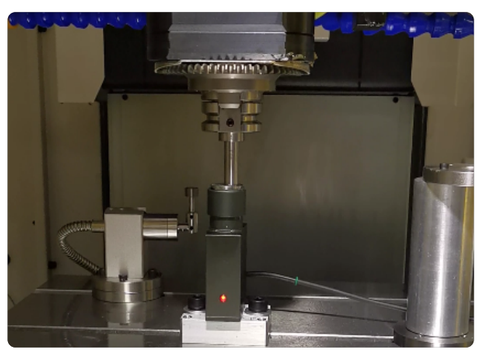
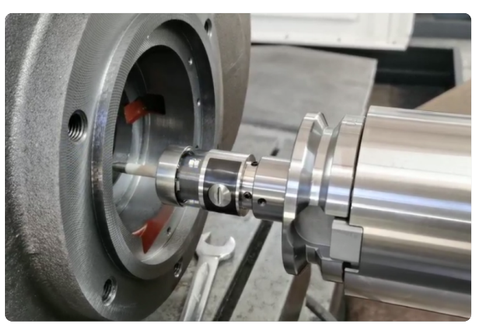
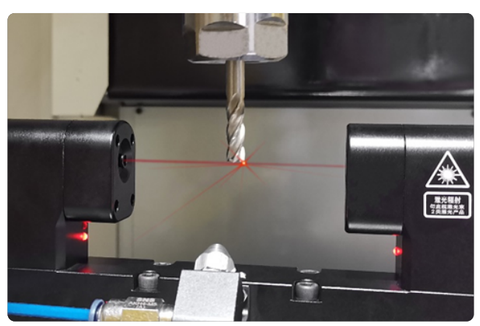

Zero point clamping system

Problems encountered in CNC machining

The installation of workpieces takes up most of the time.Correcting the zero point of the workpiece takes up most of the time.The workpiece will be scrapped if its accuracy fails to meet the requirements due to inaccurate zero point

how to solve the problem-zero-point clamping system

Benefits used zero point clamping system

1.The process can be interrupted without a problem at any time

2.Increase of machine running time,up to 90% less set-up time

3. High repetition accuracy to ensure accuracy and stability of parts

Basic of zero point clamping

1.The locking mechanism is composed of spigot and steel balls, and the unlocking action is controlled by air pressure or hydraulic pressure

2.IThe spigot is composed of centering spigot, compensation spigot and chucking spigot to ensure that it will not be over positioned

3. Dustproof, clamping force, locking force, accuracy and service life are the core indicators of zero point clamping system

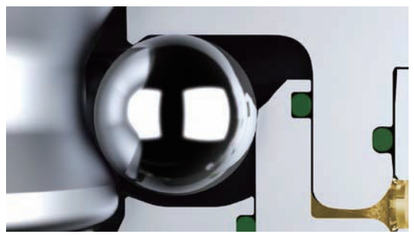

Application Case

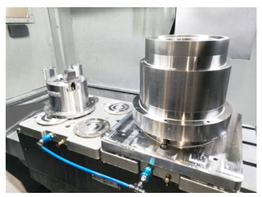
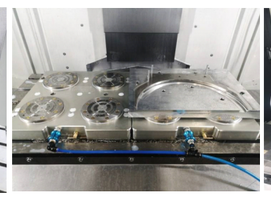
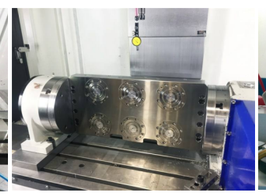
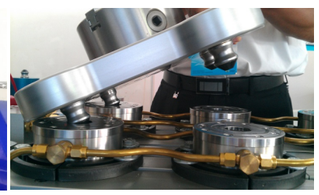

Zero point clamping system specification and dimessions

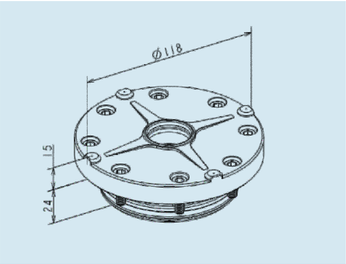

3A-110104 built-in zero point clamp

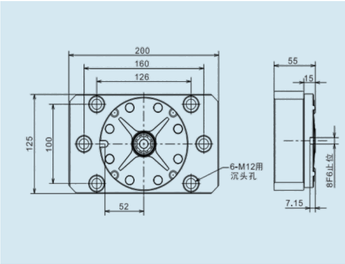

3A-110105 single zero point clamp

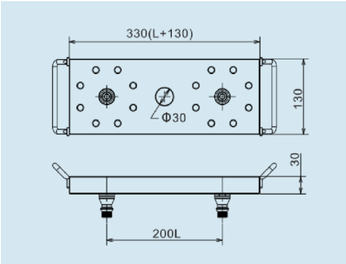

3A-110116 reference pallet

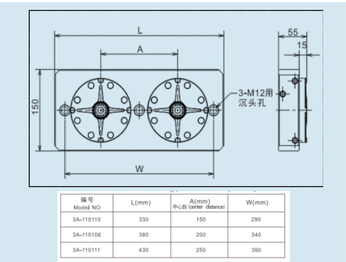

编号 Model NO	L(mm)	A(mm) 中心距 (center distance)	W(mm)
3A-110110	330	150	290
3A-110106	380	200	340
3A-110111	430	250	390

double zero point clamp

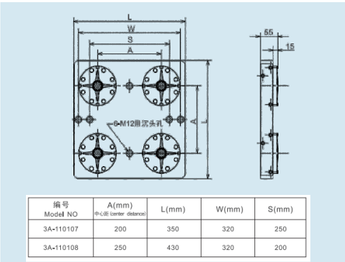

编号 Model NO	A(mm) 中心距 (center distance)	L(mm)	W(mm)	S(mm)
3A-110107	200	350	320	250
3A-110108	250	430	320	200

quatro zero point clamp

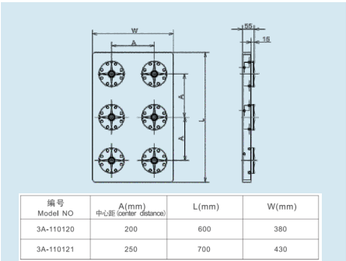

编号 Model NO	A(mm) 中心距 (center distance)	L(mm)	W(mm)
3A-110120	200	600	380
3A-110121	250	700	430

Hexa zero point clamp

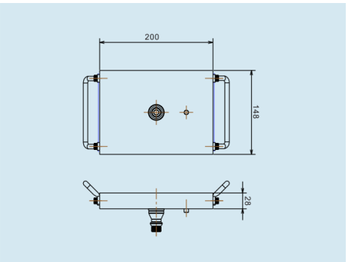

3A-110134 Single pallet

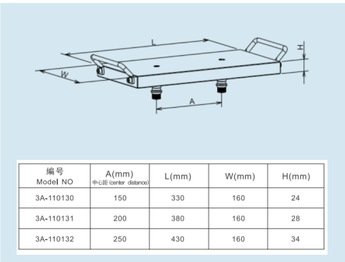

编号 Model NO	A(mm) 中心距 (center distance)	L(mm)	W(mm)	H(mm)
3A-110130	150	330	160	24
3A-110131	200	380	160	28
3A-110132	250	430	160	34

2-Fold pallet

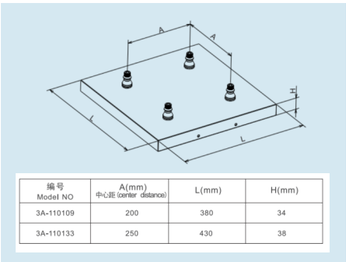

编号 Model NO	A(mm) 中心距 (center distance)	L(mm)	H(mm)
3A-110109	200	380	34
3A-110133	250	430	38

4-Fold pallet

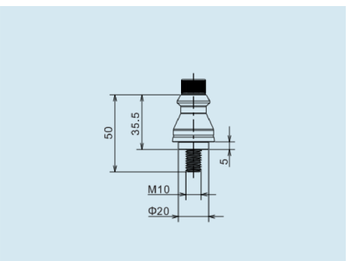

3A-400100 centering spigot

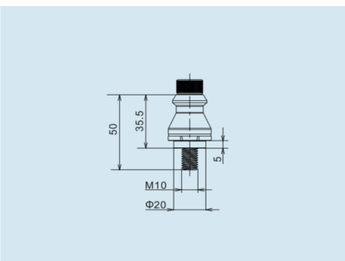

3A-400101 compensation spigot

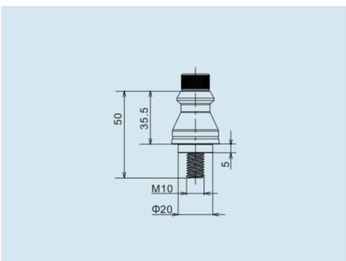

3A-400102 chunking spigot

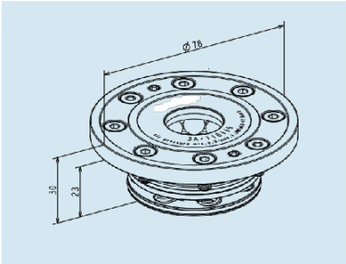

3A-110119 built in zero point clamp

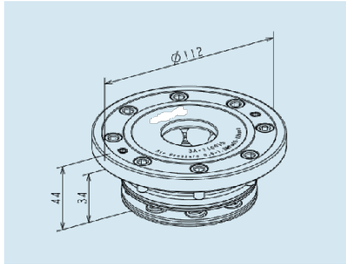

3A-110219 built in zero point clamp

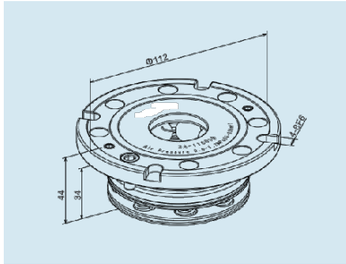

3A-110119 built in zero point clamp

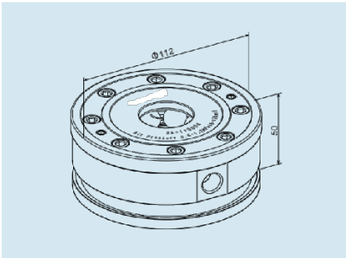

3A-110004 zero point clamp

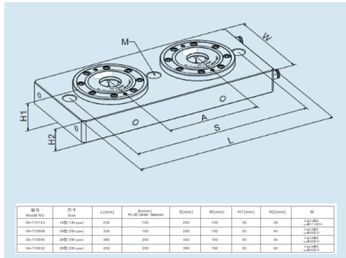

编号 Model NO	尺寸 Size	L(mm)	A(mm) 中心距 (center distance)	S(mm)	W(mm)	H1(mm)	H2(mm)	M
3A-110112	2-M8 (39 per)	230	150	200	150	35	20	4-M12深15 4-M12深15
3A-110009	2-M8 (39 per)	300	150	250	150	50	40	4-M12深15 4-M12深15
3A-110008	2-M8 (39 per)	380	200	340	150	50	40	4-M12深15 4-M12深15
3A-110002	2-M8 (39 per)	430	250	390	150	50	40	4-M12深15 4-M12深15

double zero point clamp

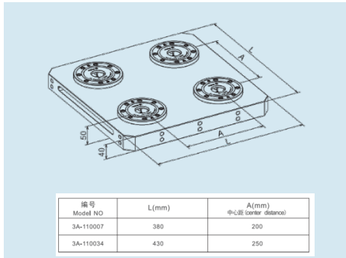

编号 Model NO	L(mm)	A(mm) 中心距 (center distance)
3A-110007	380	200
3A-110034	430	250

quatro zero point clamp

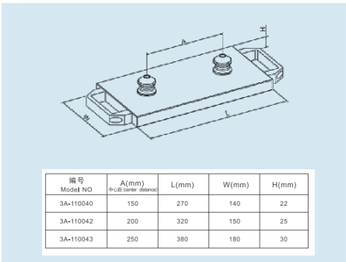

编号 Model NO	A(mm) 中心距 (center distance)	L(mm)	W(mm)	H(mm)
3A-110040	150	270	140	22
3A-110042	200	320	150	25
3A-110043	250	380	180	30

zero point clamp pallet

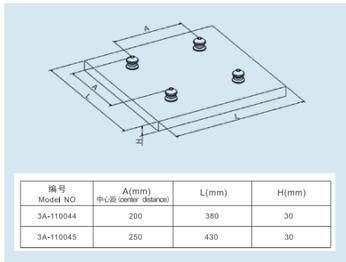

编号 Model NO	A(mm) 中心距 (center distance)	L(mm)	H(mm)
3A-110044	200	380	30
3A-110045	250	430	30

zero point clamp pallet

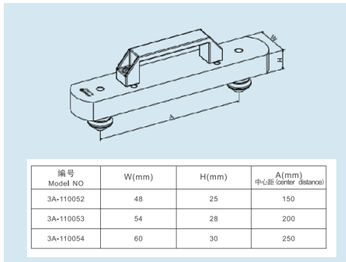

编号 Model NO	W(mm)	H(mm)	A(mm) 中心距 (center distance)
3A-110052	48	25	150
3A-110053	54	28	200
3A-110054	60	30	250

zero point alignment datum

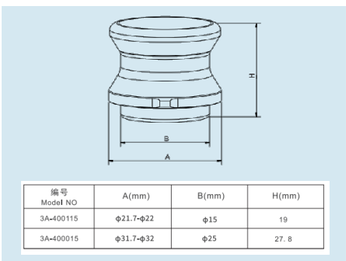

编号 Model NO	A(mm)	B(mm)	H(mm)
3A-400115	Φ21.7-Φ22	Φ15	19
3A-400015	Φ31.7-Φ32	Φ25	27. 8

centering spigot

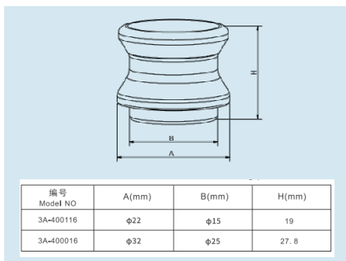

编号 Model NO	A(mm)	B(mm)	H(mm)
3A-400116	Φ22	Φ15	19
3A-400016	Φ32	Φ25	27. 8

compensation spigot

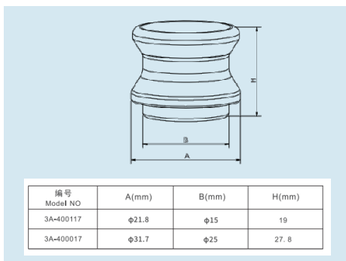

编号 Model NO	A(mm)	B(mm)	H(mm)
3A-400117	Φ21.8	Φ15	19
3A-400017	Φ31.7	Φ25	27. 8

chunking spigot

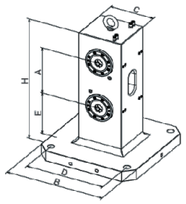

3A-110082 Double side zero point clamp

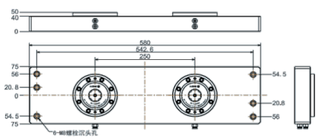

3A-10000818 Two link bridge zero point clamp

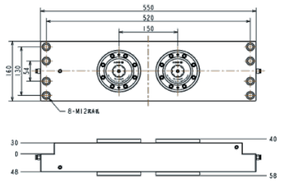

3A-10000824 Double-side bridge zero point

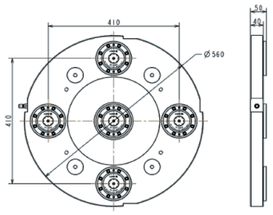

3A-10000887 five joint zero point

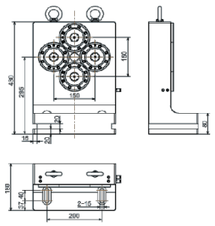

3A-10000154 zero point square block

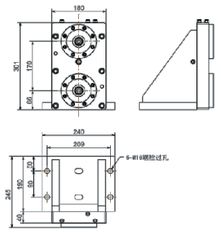

3A-10000891 zero point square block

Quick change chuck specification and dimessions

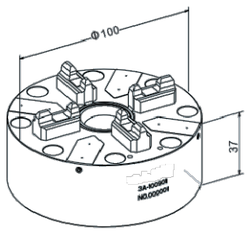

3A-100901 ITS chuck100 without plate

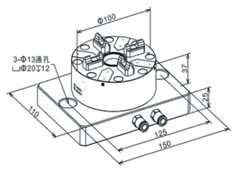

3A-100902 ITS chuck100 with plate

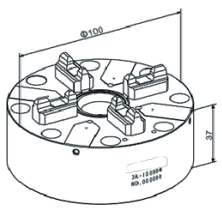

3A-100904 rapid action chuck100

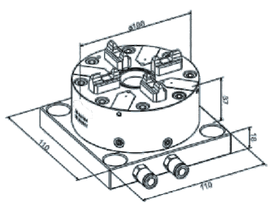

3A-100057 rapid action chuck100 with plate

With air detection and anti reverse function,Side and bottom intake is available, Loction hole at bottom

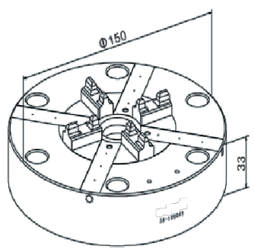

3A-100049 Power chuck150

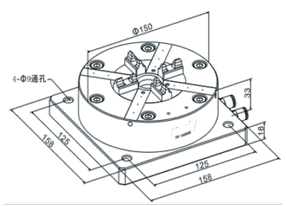

3A-100050 power chuck150 with plate

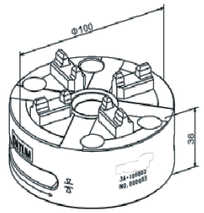

3A-100003 Quick manual chuck100P

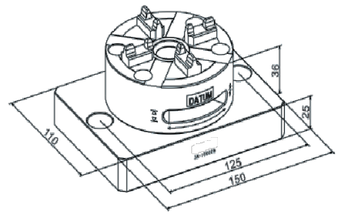

3A-100009 Quick manual chuck100P with plate

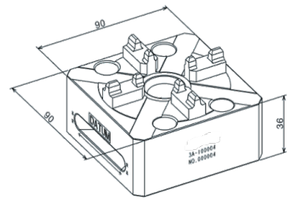

3A-100004 Square manual chuck

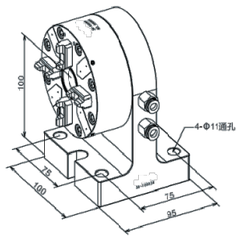

3A-100034 Single auto chuck-horizontal

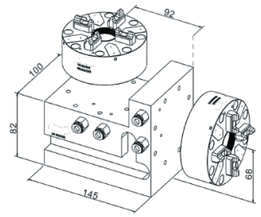

3A-100028 Square block for auto chuck100

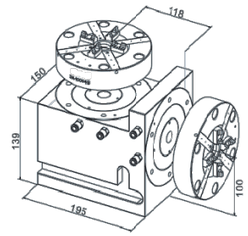

3A-100069 Square block for power auto chuck150

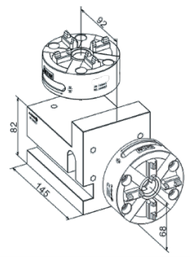

3A-100027 Square block for manual chuck

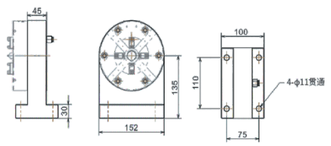

3A-10000349 powerful T base plate

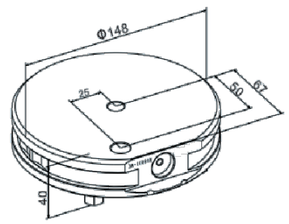

3A-110018 Pallet Kit Ø148

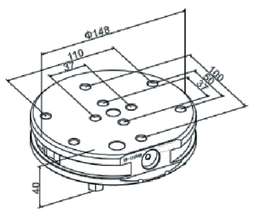

3A-110048 Pallet Kit Ø148

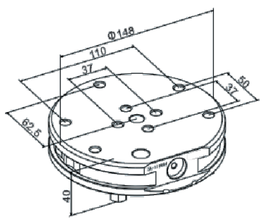

3A-110084 Pallet Kit Ø148G

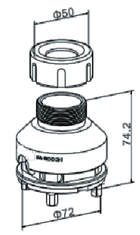

3A-110031 Collet chuck holder Ø72

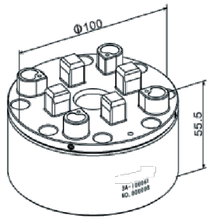

3A-100061 R type automatic chuck

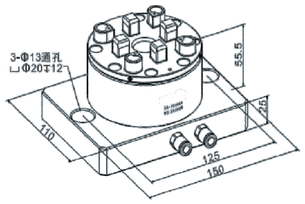

3A-100062 R type chuck with plate

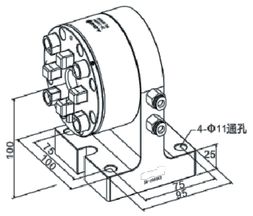

3A-100063 R type Vertical chuck

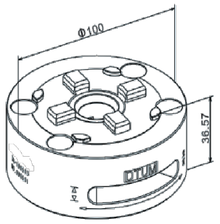

3A-100903 R manual chuck

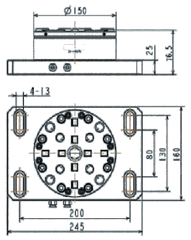

3A-100076 R150 pneumatic chuck

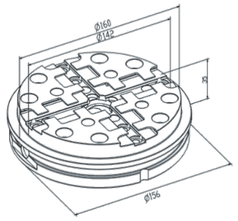

3A-100088 R type Plateϕ156

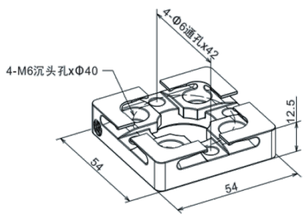

3A-400008 R Centering plate

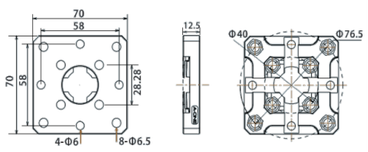

3A-400090 R Centering plate 70*70

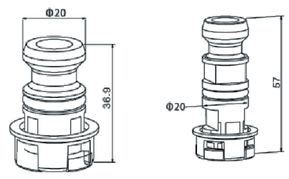

3A-400006/400043 R Type drawbar

Quick change chuck application

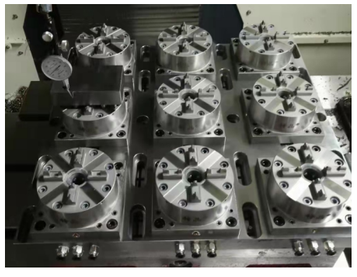

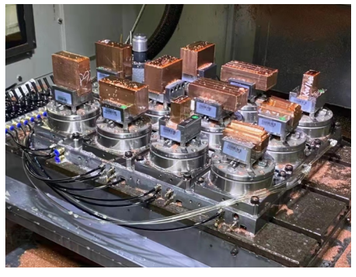

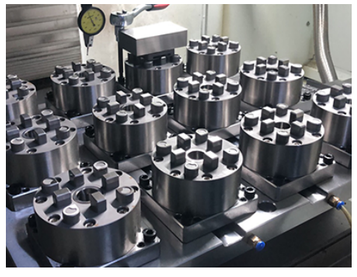

Mechanical zero point clamping

The four hole mechanical zero point clamping is a positioning tool that can quickly exchange fixtures and centering fixtures. The standard installation ways enables the rapid and repeatable conversion of vice, pallet, chuck and other tools between machine tools, and ensures the accuracy without disassembly and aligement time

Benefits used zero point clamping system

1. Repetition accuracy is within 0.005mm

2.Large bearing area, suitable for heavy cutting

3. Reduce fixture replacement and adjustment time by more than 80%

4.Fixtures can be standardized

5.Numerous combinations of tooling and fixtures can be designed

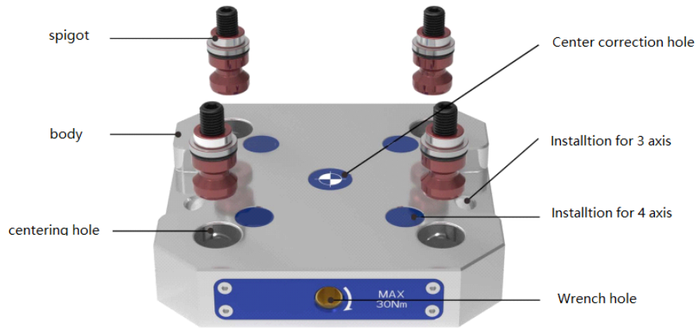

Fixture combination case

With the mechanical zero point plate, you candesign various tooling fixtures flexibly, and exchange them among three-axis, four axis and five axis machine tools quickly to reduce the downtime of the machine tool

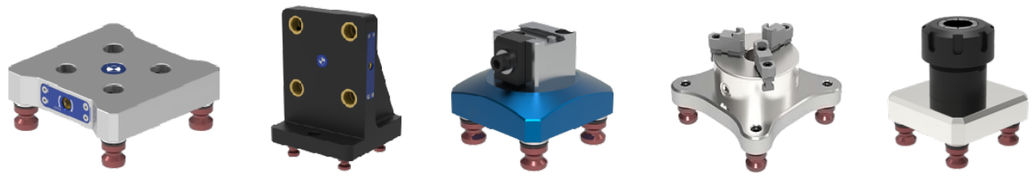

Mechanical zero point clamping specification and dimessions

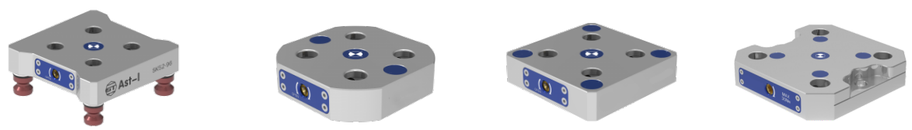

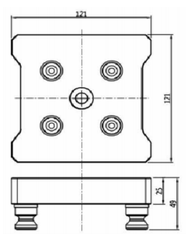

SK52-S96

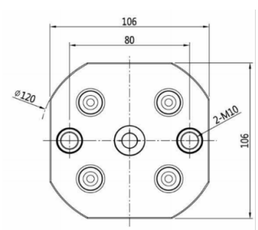

SK52-S120

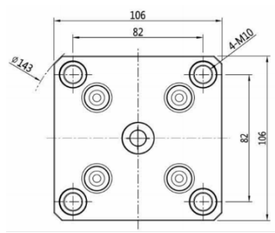

SK52-S145

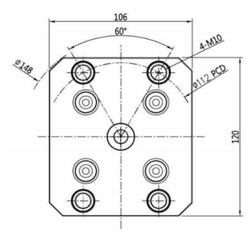

SK52-S150

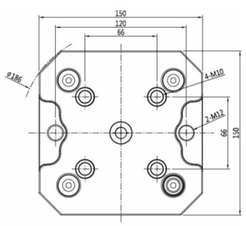

SK96-S190

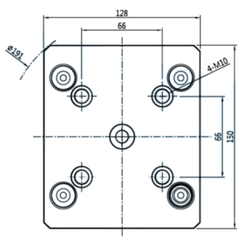

SK96-S195

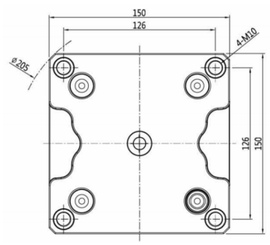

SK96-S205

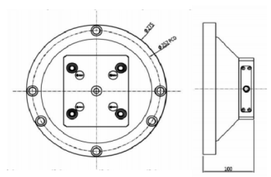

SK96-S275

52 type specification

Model	SK52-S96	SK52-S120	SK52-S145	SK52-S150
Dimessions/mm	121*121*25	106*106*25	106*106*25	120*106*25
Repeatability/mm	0.005	0.005	0.005	0.005
Clamping force/KN	18	18	18	18
Material	steel	steel	steel	steel
Weight/Kg	2.4	1.6	1.8	2

96 type specification

Model	SK96-S190	SK96-S195	SK96-S205	SK96-S275
Dimessions/mm	150*150*30	150*128*30	150*150*30	φ100
Repeatability/mm	0.005	0.005	0.005	0.005
Clamping force/KN	22	22	22	22
Material	steel	steel	steel	steel
Weight/Kg	4	4.6	4	9.6

Self-centering vise

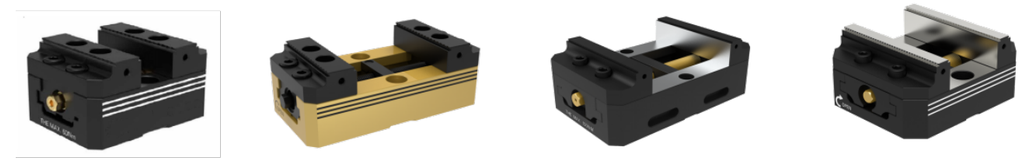

Model	SC-75100	SC-75150	SC-130155	SC-150250
Dimessions/mm	75*100*56	75*150*56	130*155*73.5	150*250*94
Repeatability/mm	0.01	0.02	0.02	0.02
Clamping range	0-77	0-121	0-150	0-240
width/mm	75	75	130	150
maximum torque/N.m	60	60	75	100
Weight	2.5	3	7	16

Application Case

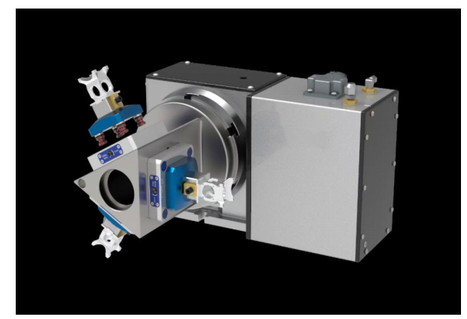

This solution is a triangle unit. the rotary table add zero point and dovetail jigs which is suitable for machining parts with small size and high position accuracy especially, and allow you to maximize the efficiency of your machine and rotary table

The rotary table is equipped with eight self-centering vises, which can machining three faces and 8 parts at one time, and can increase the production capacity by 8 times directly, reduce your machine tool downtime

This solution include CNC rotary ,tail stock, mechanical zero point self centering vises.it' s better for smaller machines, smaller parts,and smaller rotary tables. When two vises are installtion together, five side can be machined at one clamping

This is a demonstration of clamping way for machining parts of five axis machine tool.you can choose self centring vise, dovetail jigs, zero point, chuck, collect to clamp parts.Maximize the utility of your machine tool' s travel and machining time