SC-C320 Specification

Introduction

1. Roller CAM struture, no backlash, high accuracy and efficiency
2. Platter Diameter 320mm, hydraulic brake
3. Suitable for installation on 1050mm travel VMC

Dimensions	Table Diameter	mm	Ø320
	Diameter of Table Central Hole	mm	Ø80H7
	Center Height (Vertical)	mm	210
	T slot width	mm	14H7
	Guide Block width		18h7
	Net Weight (servo motor excluded)	kg	180

Roller CAM	Gear Ratio	/	50
	Max. Rotation(Calculate with Fanuc α Motor)	rpm	60
	Resolution	°	0.001
	Indexing Precision	sec.	±20
	Repeatability	sec.	±4

Allowable Workpiece Load						Clamping system		Allowable load（rotary table clamping)					
Vertical/kg		Horizontal/kg		With tailstock/kg		presure/MPa	Torque/N.m	F(N)		FXL(N.m)		FXL(N.m)	
	220		440		440	4.5±0.5	1300		30000		1300		2100

Servo motor							
FANUC		MITSUBISHI	YASKAWA	SIMENS	SYNTEC	HEIDENHAIN	GSK
α	β						
aiF12	βis22	HG204S-D47	SGM7G-30A	1FK7083	S08-AM18-30	QSY116E	130SJT-M150D
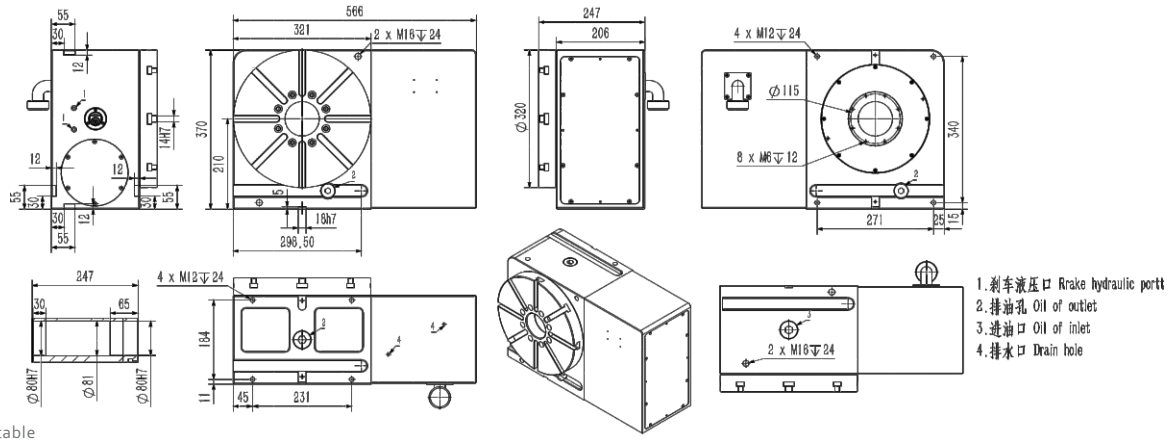
SC-C320 Dimensions